# SciMeasure Wavefront Sensor Cameras and their Application in the 5m Palomar Adaptive Optics System


SciMeasure Analytical Systems, Inc.

Ray DuVarney, Charlie Bleau, Garry Motter

Emory University, Department of Physics

Ray DuVarney*

* has a financial interest in SciMeasure Analytical Systems, Inc.

NASA/JPL, Palomar AO Team

Rich Dekany, Mitch Troy, Gary Brack

# History

| | | |
|---|---|---|
| 1992 | GTRI<br>Jim Beletic, Ray DuVarney, Charlie Bleau, Mike Adkins, Tom Collins | MIT/LL<br>CCID11 |
| 1994 | Photon Instruments<br>Jim Beletic, Ray DuVarney, Charlie Bleau, Mike Adkins, Tom Collins | MIT/LL<br>CCID11 |
| 1996 | SciMeasure (NASA/JPL)<br>Ray DuVarney, Charlie Bleau, Mike Adkins | MIT/LL<br>CCID19 |
| 1997 | SciMeasure (SBIR Phase I)<br>Ray DuVarney, Charlie Bleau, Mike Adkins | EEV<br>CCD39 |
| 1998 | SciMeasure (SBIR Phase II)<br>Ray DuVarney, Charlie Bleau, Garry Motter | EEV<br>CCD39 |

# Camera System Overview

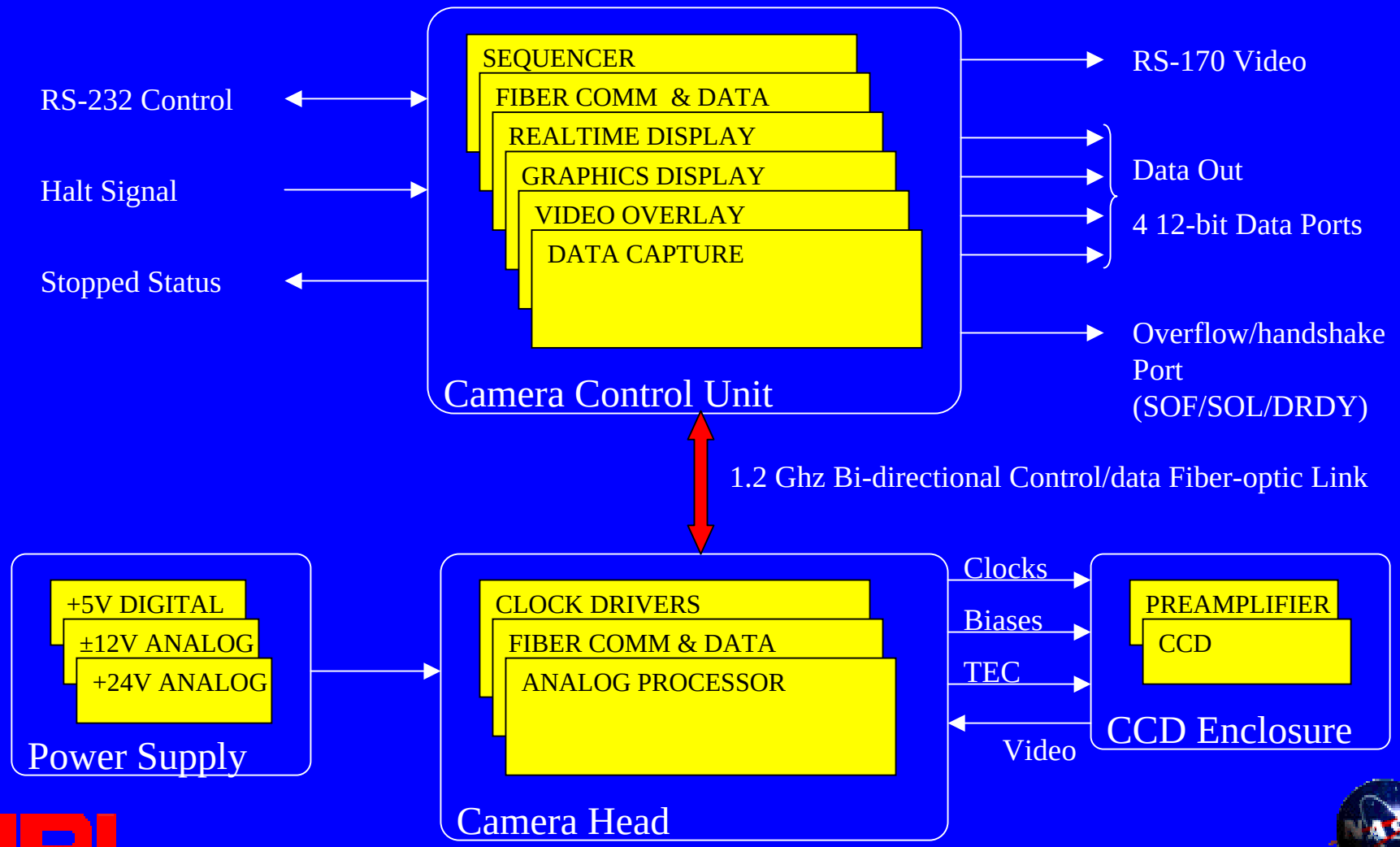

# Future Camera Overview I

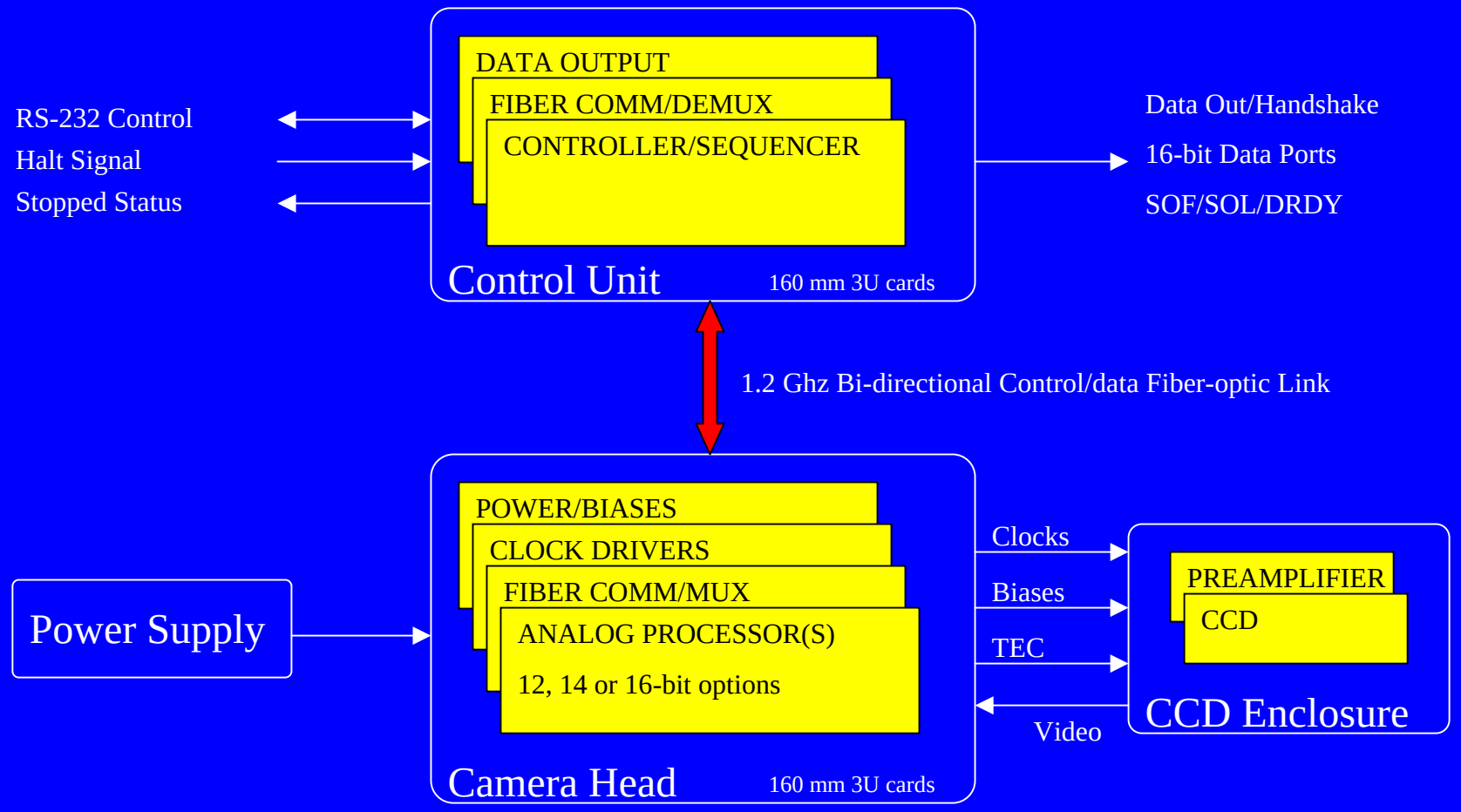

# Future Camera Overview II

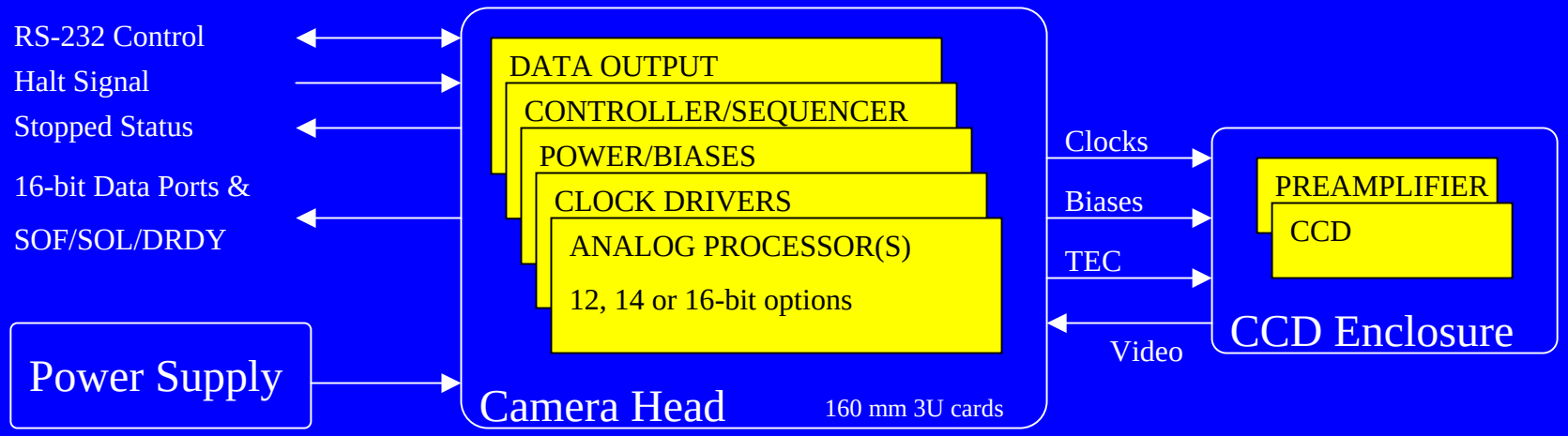

# Sequencer

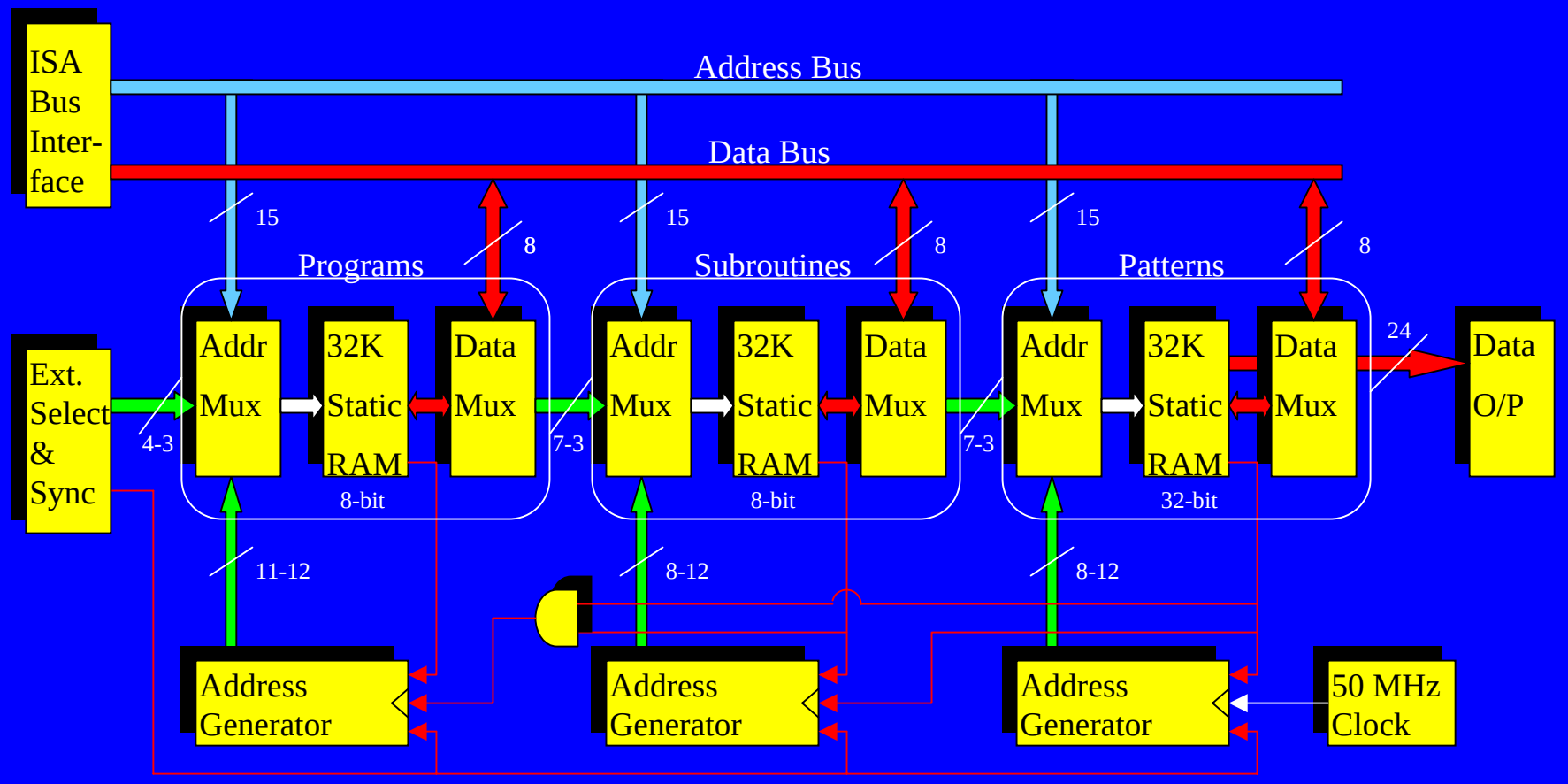
ISA Bus Inter-face
Address Bus
Data Bus
15
8
Programs
Subroutines
Patterns
Ext. Select & Sync
4-3
Addr Mux
32K Static RAM
Data Mux
8-bit
7-3
32-bit
24
Data O/P
11-12
8-12
Address Generator
50 MHz Clock

# Sequencer Programming

## Programs

```
define program 0;       # 1100 Hz Nominal

    subroutine start_of_frame;
    repeat 32;
        subroutine read_line;
    end repeat;
    repeat 2;
        subroutine integrate;
    end repeat;
end define;
```

## Subroutines

```
define subroutine read_line;

    pattern send_start_of_line      1;
    pattern shift_line              1;
    pattern wait                    10;
    pattern shift_pixel             17;
    pattern read_pixel              32;

end define;
```

## Patterns

```
define pattern read_pixel;

#
# t = /turbo, c = /clamp, S = sample, V = *DCAV
#       RG IA  BS  OR  xxx t c S CCCC FV xx
#          123 123 123           0123

        0  010 010 010 000 0 1 0 1111 01 00;    #
        0  010 010 010 000 0 1 0 1111 01 00;    #
        1  010 010 010 000 0 1 0 1111 01 00;    #
        0  010 010 010 000 0 1 0 1111 01 00;    #
        0  010 010 010 000 0 0 0 1111 01 00;    #
        0  010 010 010 000 1 0 1 1111 01 00;    #
        0  010 010 010 000 1 0 1 1111 01 00;    #
        0  010 010 010 000 1 0 1 1111 01 00;    #

        0  010 010 001 000 1 0 1 0000 01 00;    #
        0  010 010 001 000 1 0 1 0011 01 00;    #
        0  010 010 001 000 1 0 1 1000 01 00;    #
        0  010 010 001 000 0 0 1 0100 01 00;    #
        0  010 010 001 000 0 0 1 1100 01 00;    #
        0  010 010 001 000 0 0 1 0010 01 00;    #
        0  010 010 001 000 0 0 1 1010 01 00;    #
        0  010 010 100 000 0 0 1 0110 01 00;    #

        0  010 010 100 000 0 0 1 1111 01 00;    #
        0  010 010 100 000 0 0 0 1111 01 00;    #
        0  010 010 100 000 0 1 0 1111 01 00;    #
        0  010 010 100 000 0 1 0 1111 01 00;    #
        0  010 010 100 000 0 1 0 1111 01 00;    #
        0  010 010 100 000 0 1 0 1111 01 00;    #
        0  010 010 100 000 0 1 0 1111 01 00;    #
        0  010 010 100 000 0 1 0 1111 01 00;    #

end define;
```

# Fiber Link

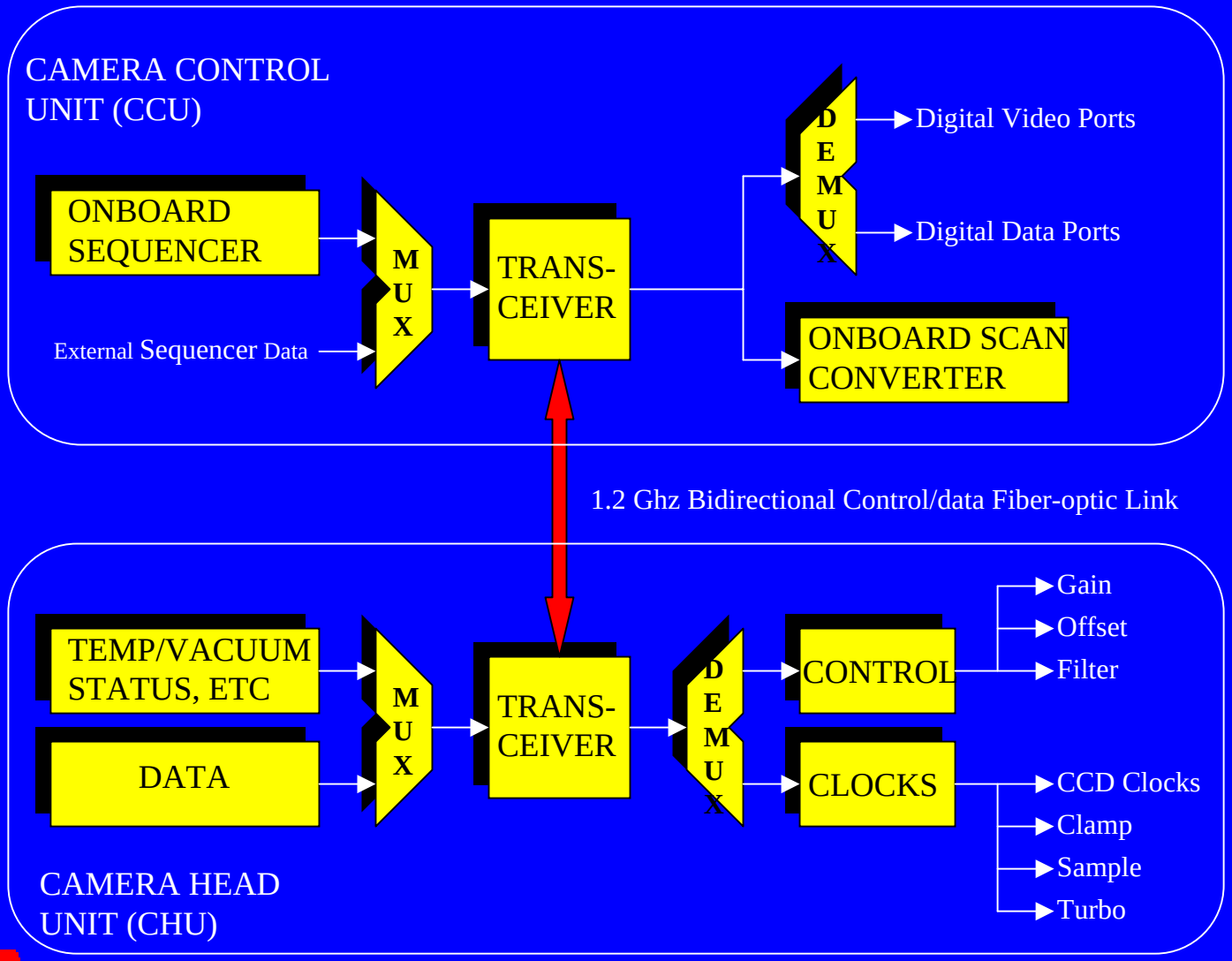
CAMERA CONTROL UNIT (CCU)
ONBOARD SEQUENCER
External Sequencer Data
MUX
TRANS-CEIVER
DEMUX
Digital Video Ports
Digital Data Ports
ONBOARD SCAN CONVERTER
1.2 Ghz Bidirectional Control/data Fiber-optic Link
TEMP/VACUUM STATUS, ETC
DATA
MUX
TRANS-CEIVER
DEMUX
CONTROL
Gain
Offset
Filter
CLOCKS
CCD Clocks
Clamp
Sample
Turbo
CAMERA HEAD UNIT (CHU)

# Clock Driver Board

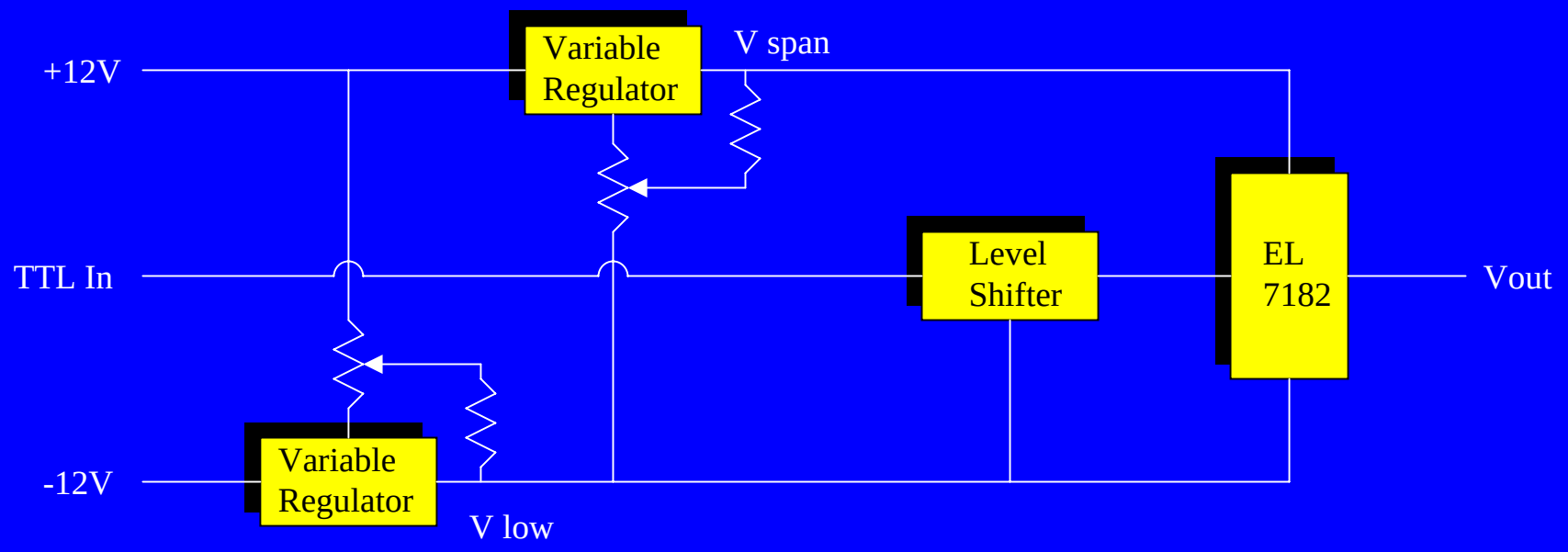


- 12 Individually Programmable Clocks
- ±11V Range
- 16V Maximum Swing
- 20 ns Switching Time

# Preamplifier Board

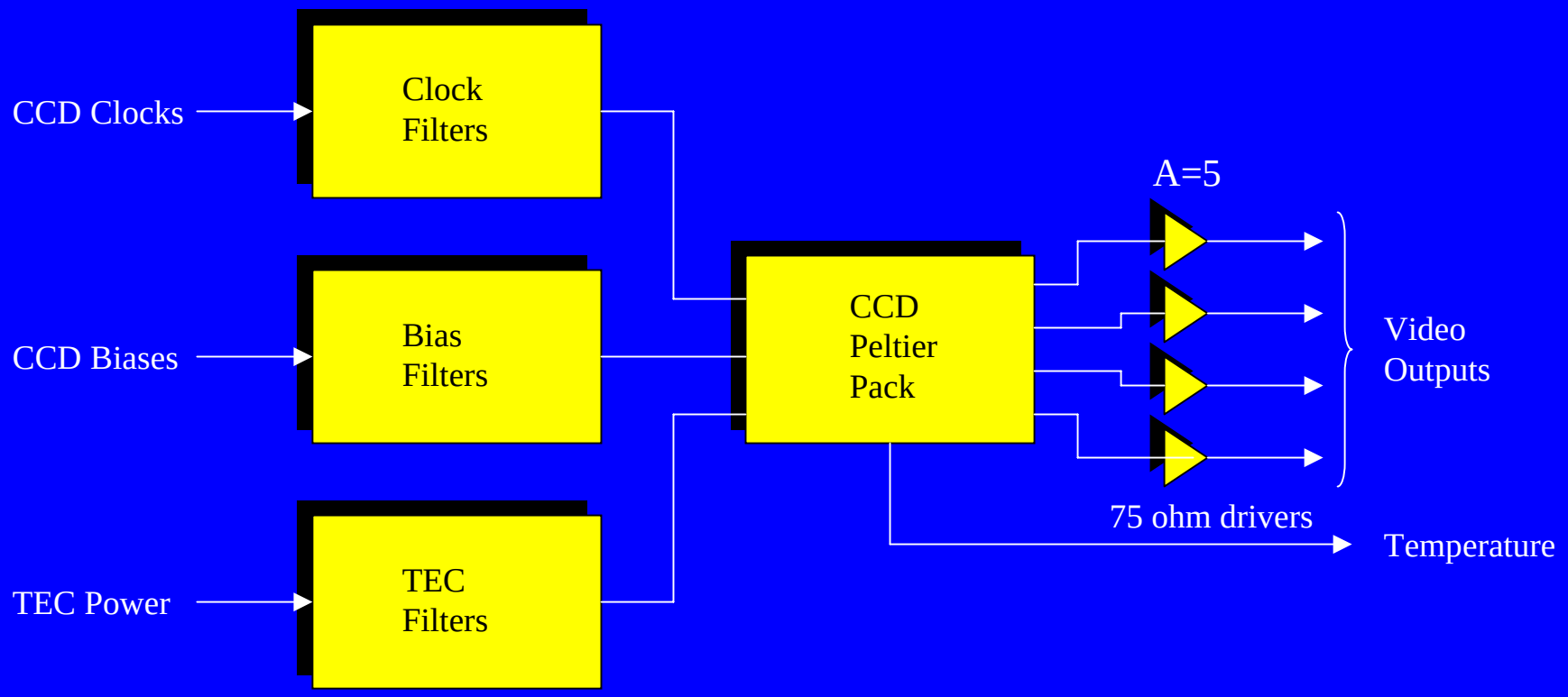

# Analog Processor

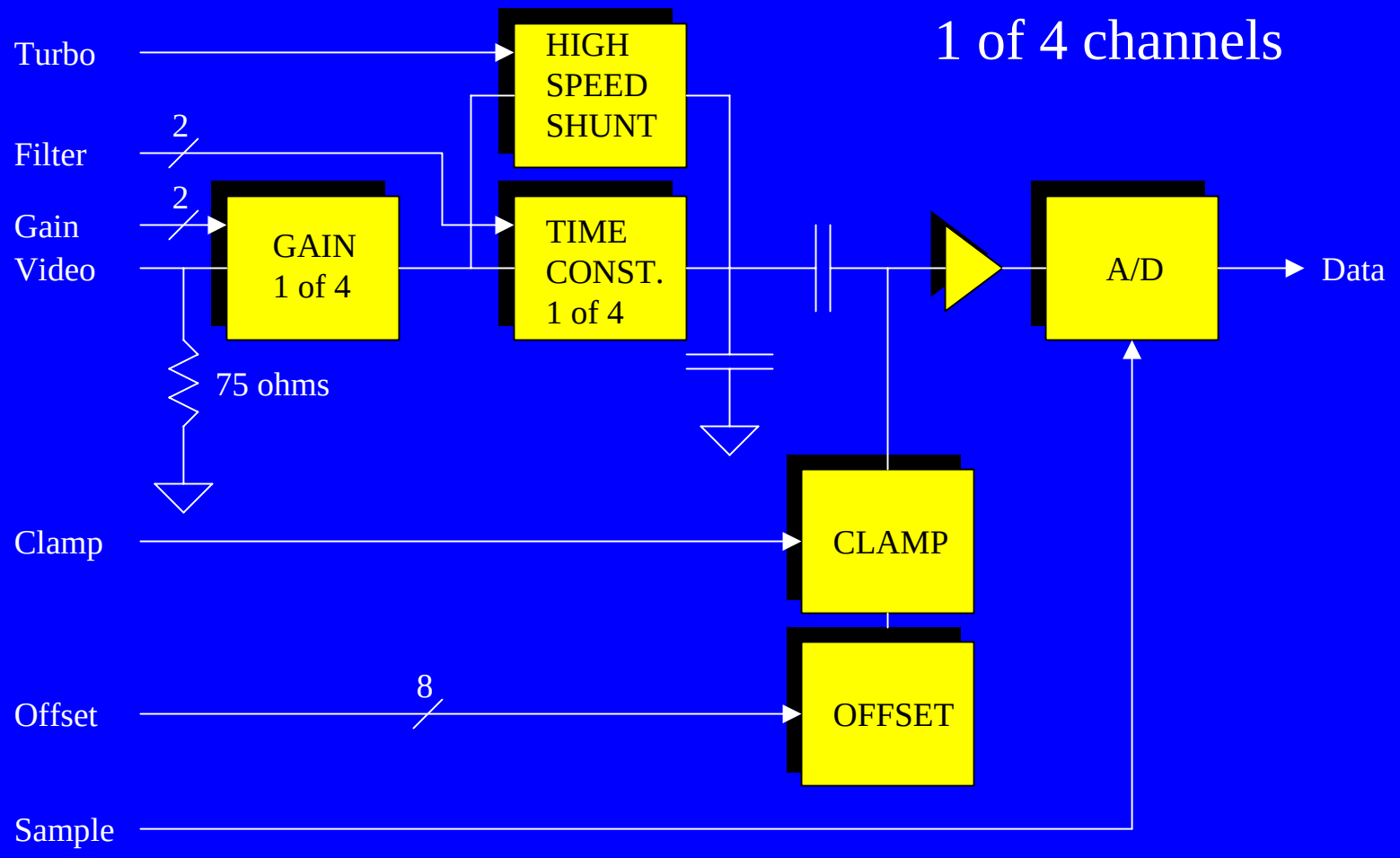

# Data Output/Display/Capture

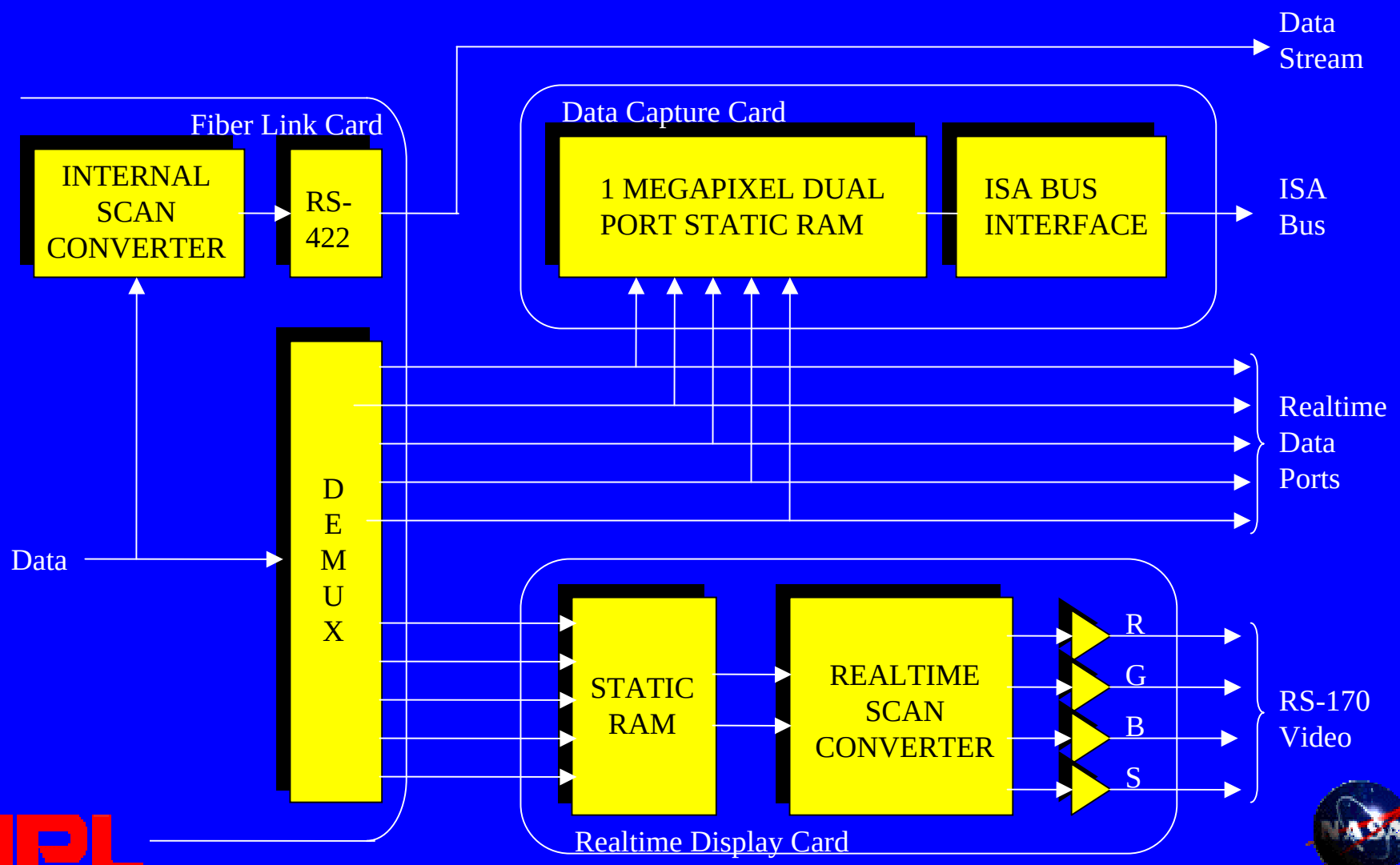

# Control Panel

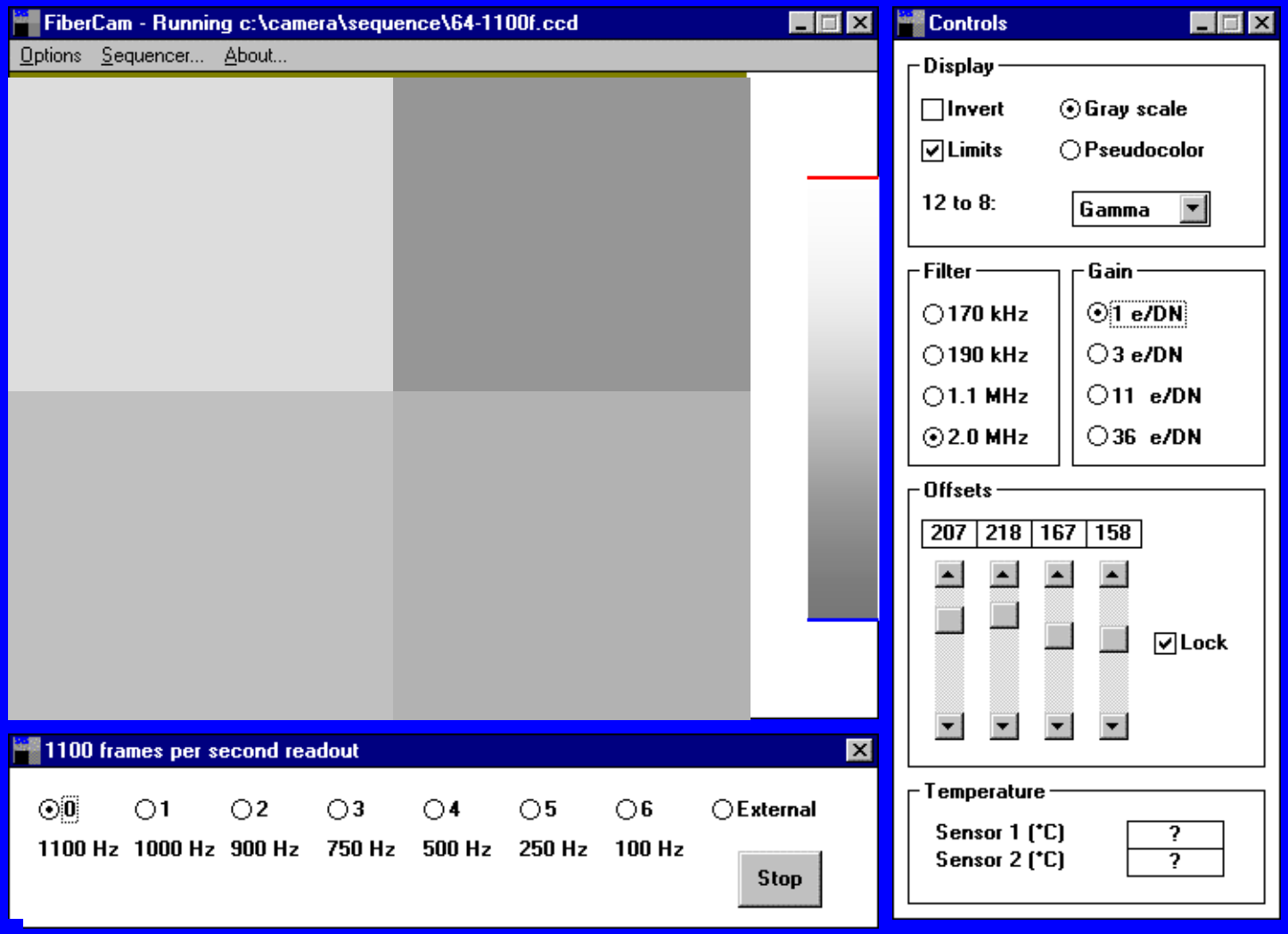

# Camera Performance

| Noise (e-) | | Pixel Rate (/sec/port) | Frame Rate (/sec) |
|---|---|---|---|
| 3.0 | @ | 80 kpix | 50 |
| 3.5 | @ | 178 kpix | 110 |
| 5.9 | @ | 1.14 Mpix | 550 |
| 7.5 | @ | 2.00 Mpix | 1100 |

EEV CCD39 - 64x64 pixel frame size - Read Noise calculated from Photon Transfer curve
MIT/LL CCID19 achieved 6.5 e- @ 1.1 Mpix/sec/port and 600 frames/sec

# Palomar AO System

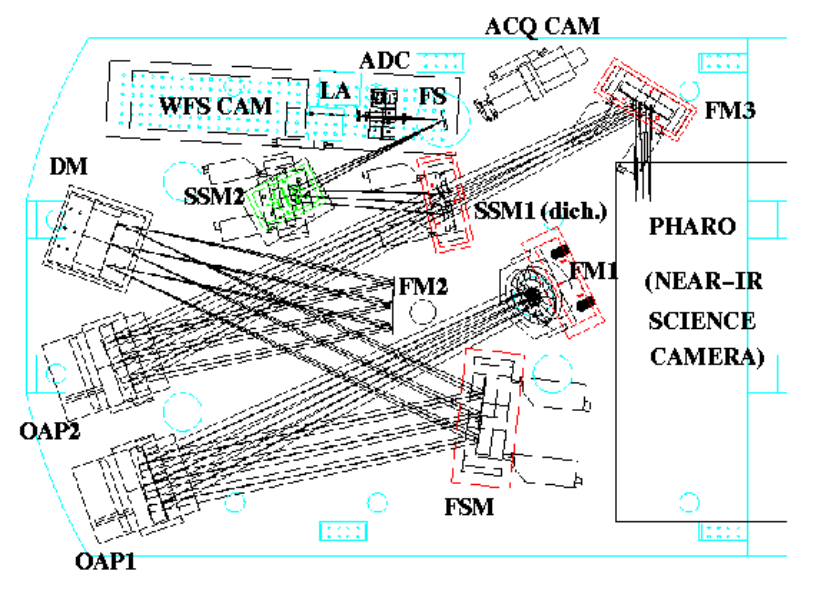


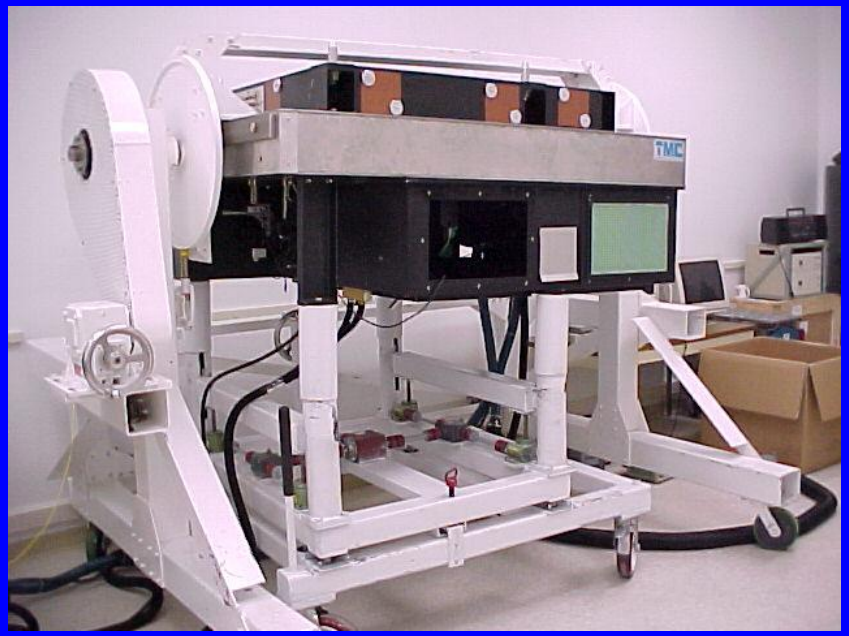

# PALAO Performance

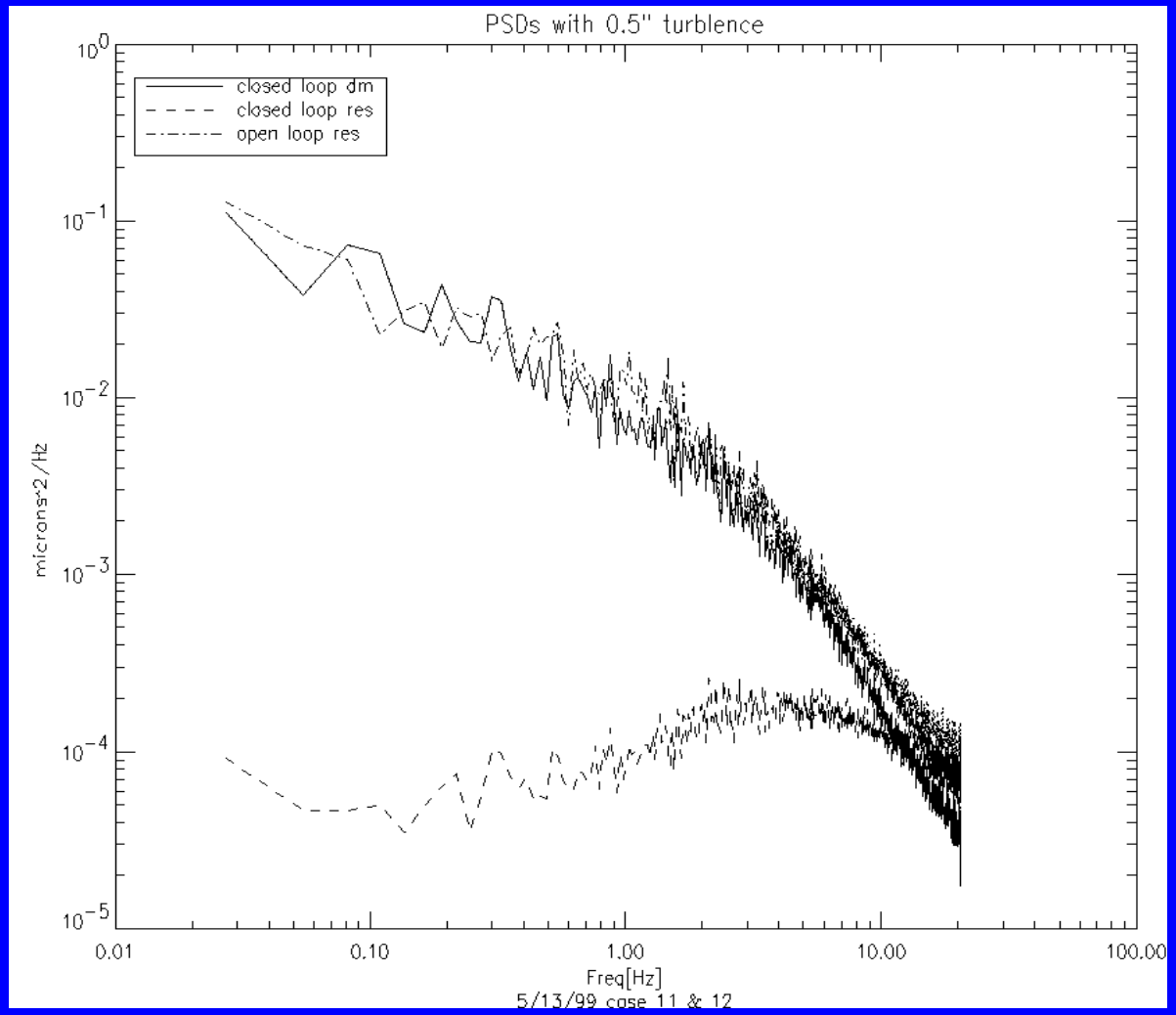

# PALAO Results

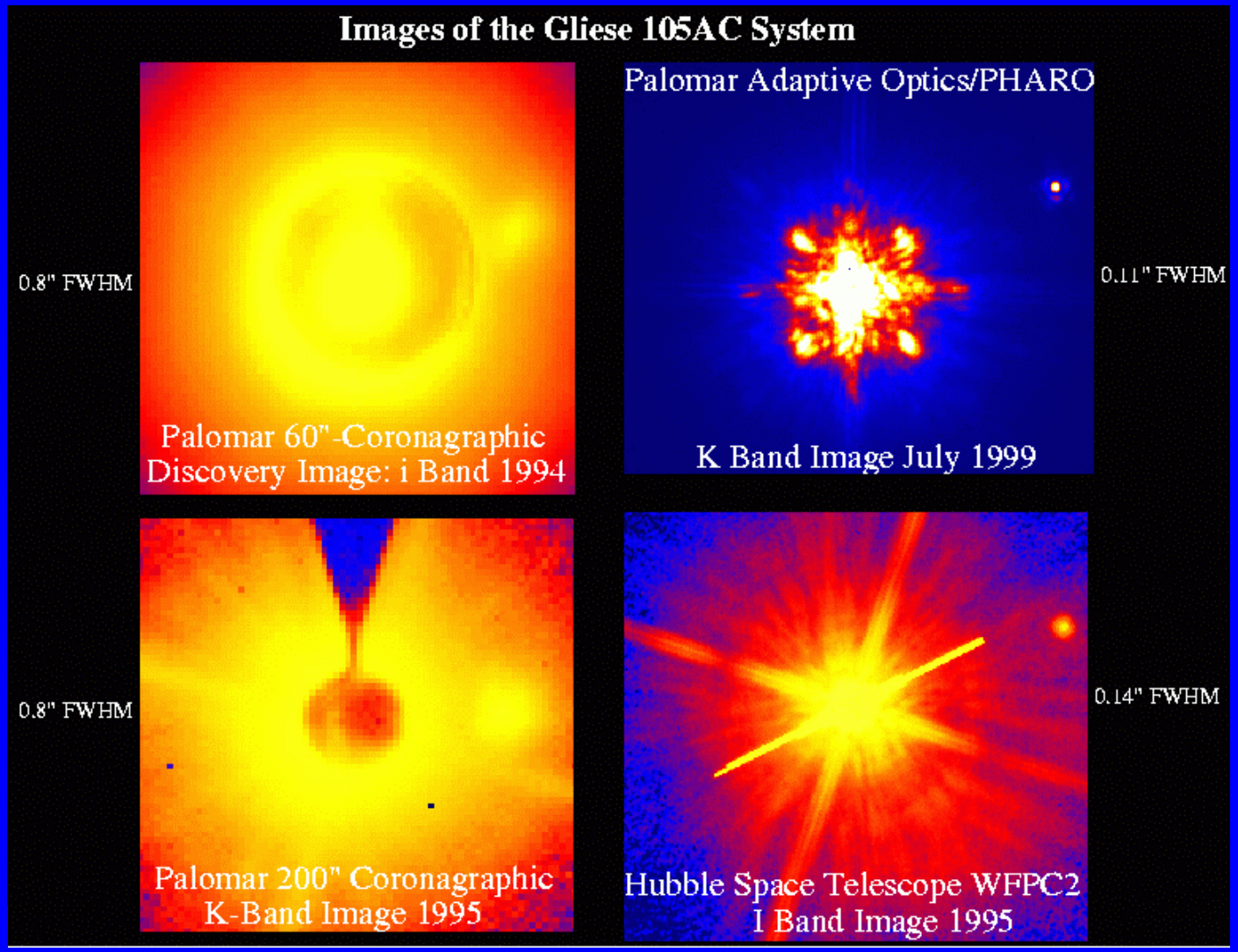

# PALAO Results

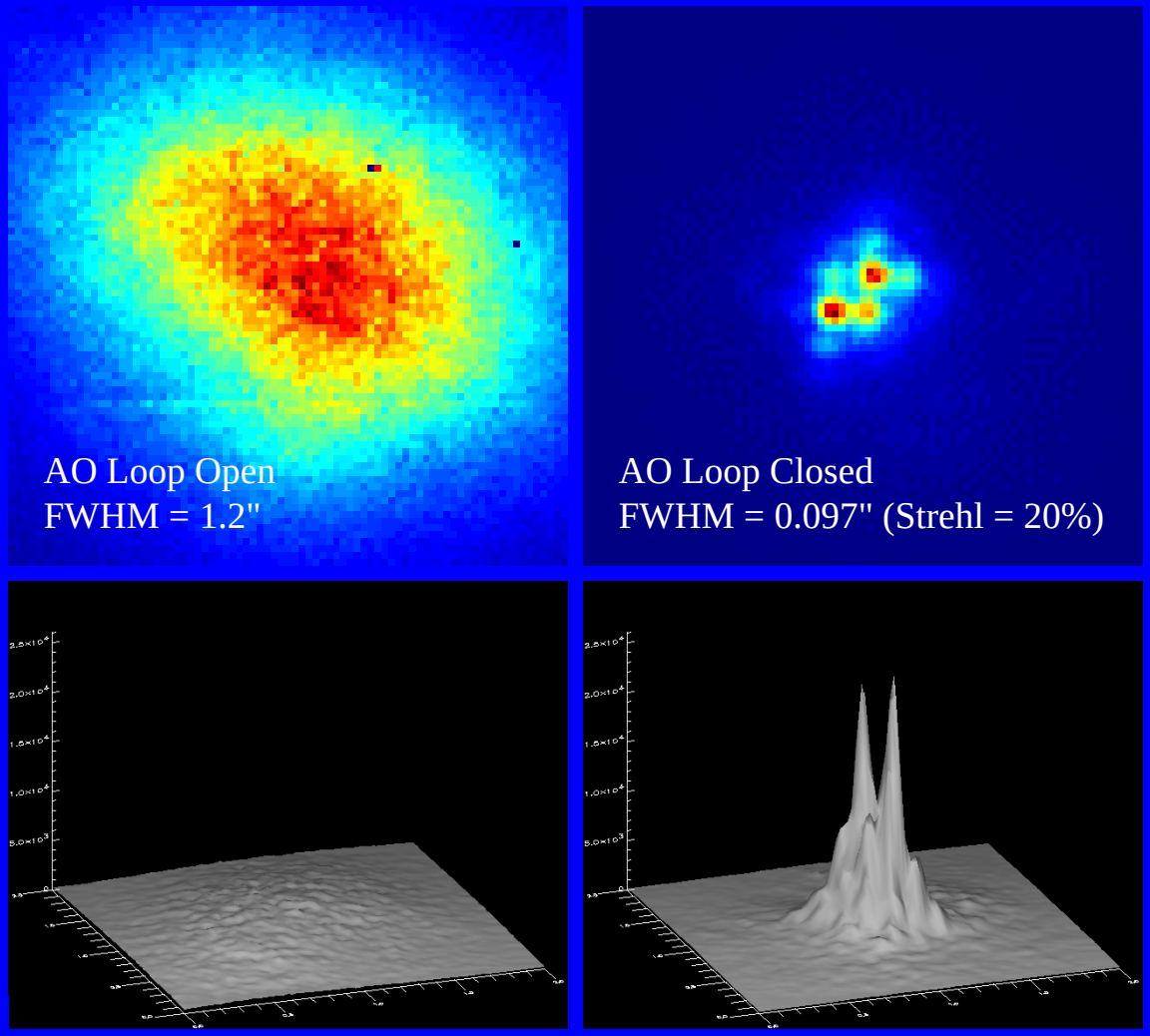


QS Aql
(HR 7486)
Binary Star
with
0.185"
Separation

# PALAO Results

## Trapezium Cluster in the Orion Nebula

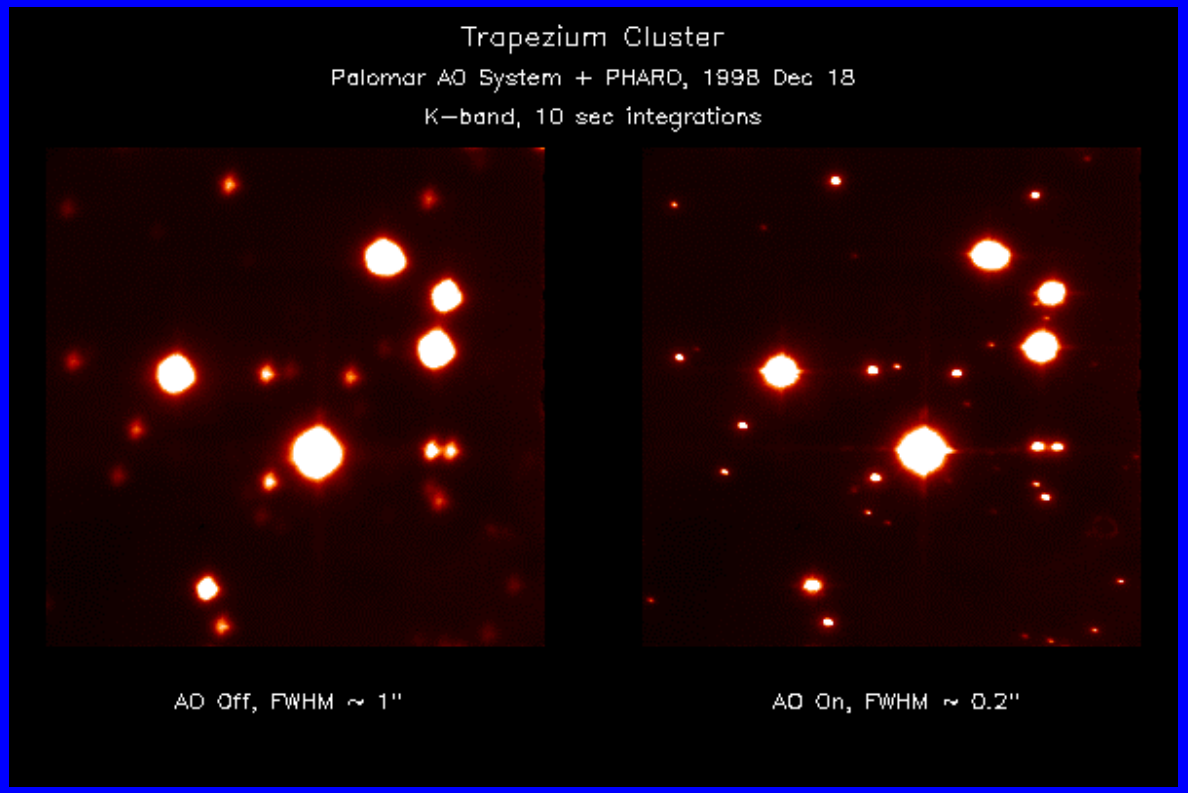


*The left image was taken with the AO system off; the seeing was about 1 arcsec. With the AO system locked on Theta 1 Ori C (brightest star), the stellar images were about 0.2" across, with the brightest stars saturated. Each image is represents approximately 40 arcsec x 40 arcsec field.*

# Acknowledgements


- SBIR Phase I Grant NAS8-97195
- SBIR Phase II Grant NAS8-98081
- Jim Beletic and the ESO Optical Detector Team
- Mike Shao - Director, Interferometry Center of Excellence, NASA/JPL
- Eric Bloemhof - Mt. Palomar Observatory
- Horace Dale - Physics Dept, Emory University