EEV CCD39 wavefront sensor cameras for AO and interferometry

SciMeasure Analytical Systems, Inc.

Ray DuVarney, Charlie Bleau, Garry Motter

Emory University, Department of Physics

Ray DuVarney*

* has a financial interest in SciMeasure Analytical Systems, Inc.

NASA/JPL, Interferometry Systems Group

Rich Dekany, Mitch Troy, Gary Brack,

Thang Kieu, Dean Palmer

NASA/JPL, Interferometry Metrology Group

Stuart Shaklan, Andy Kuhnert

Camera System Overview

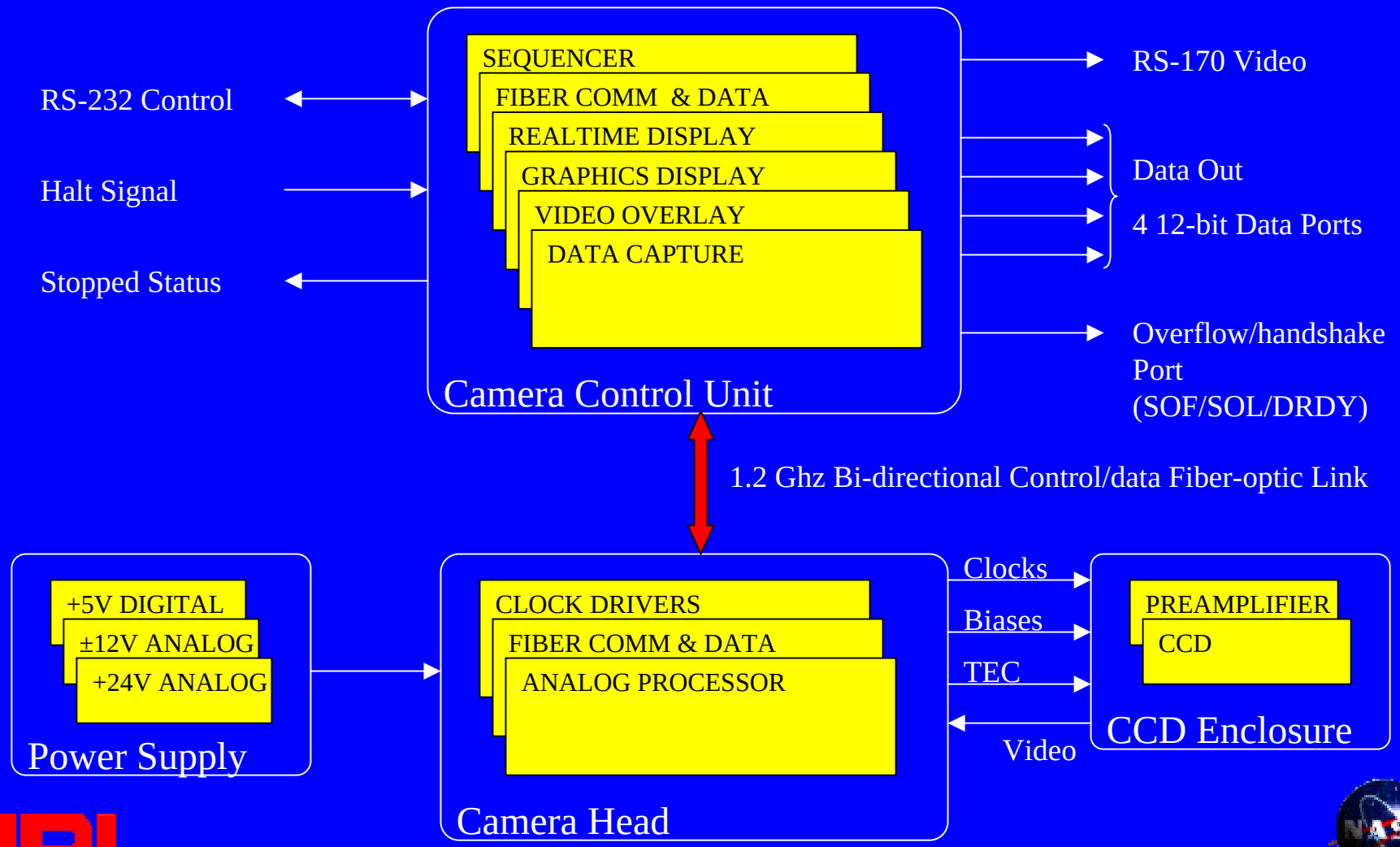

Sequencer

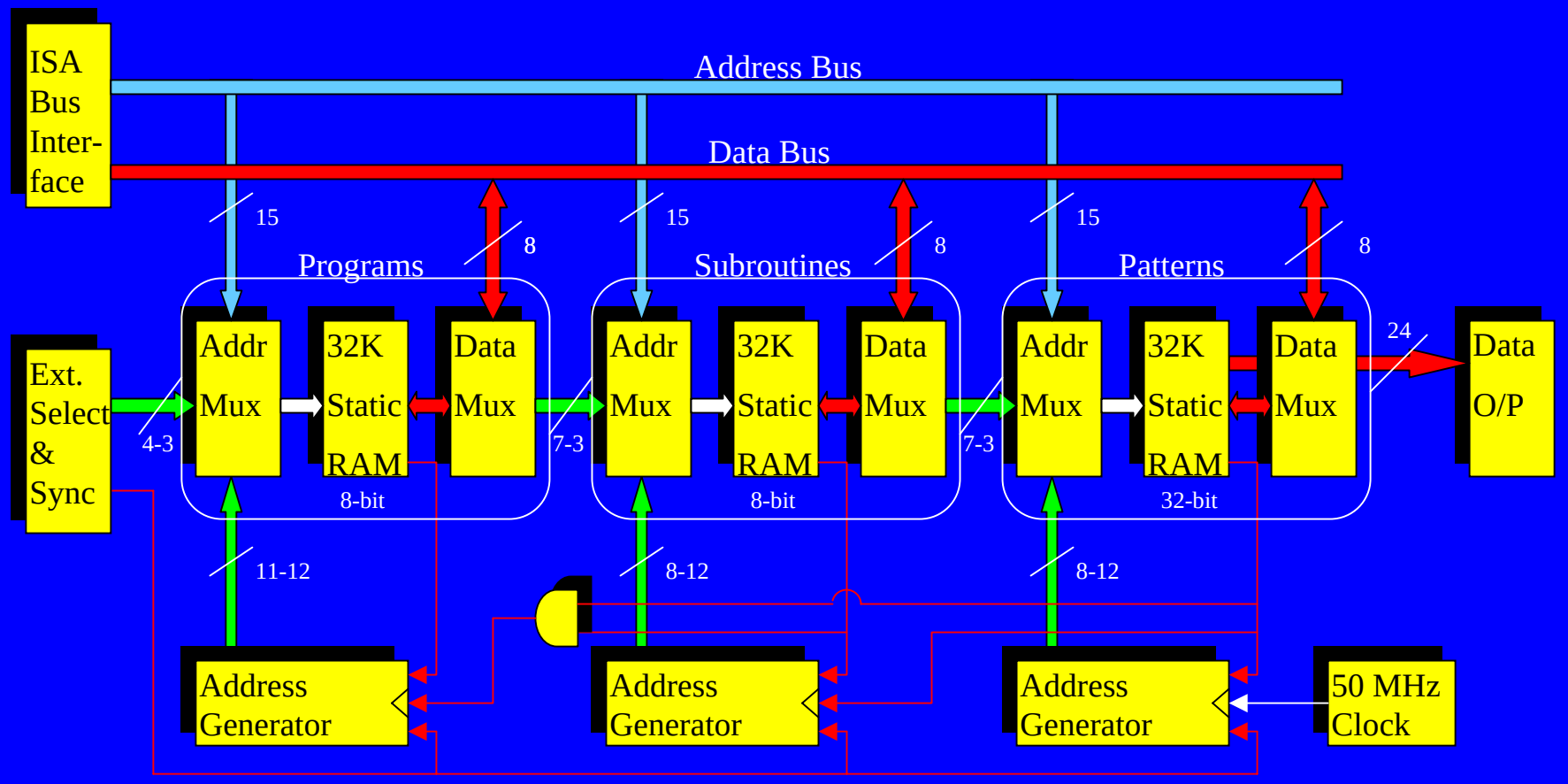
ISA Bus Inter-face
Address Bus
Data Bus
15
8
Programs
Subroutines
Patterns
Ext. Select & Sync
4-3
Addr Mux
32K Static RAM
Data Mux
8-bit
7-3
32-bit
24
Data O/P
11-12
8-12
Address Generator
50 MHz Clock

Sequencer Programming

Programs

```
define program 0;       # 1100 Hz Nominal

    subroutine start_of_frame;
    repeat 32;
        subroutine read_line;
    end repeat;
    repeat 2;
        subroutine integrate;
    end repeat;
end define;
```

Subroutines

```
define subroutine read_line;

    pattern send_start_of_line      1;
    pattern shift_line              1;
    pattern wait                    10;
    pattern shift_pixel             17;
    pattern read_pixel              32;

end define;
```

Patterns

```
define pattern read_pixel;

#
# t = /turbo, c = /clamp, S = sample, V = *DCAV
#       RG IA  BS  OR  xxx t c S CCCC FV xx
#          123 123 123           0123

        0  010 010 010 000 0 1 0 1111 01 00;    #
        0  010 010 010 000 0 1 0 1111 01 00;    #
        1  010 010 010 000 0 1 0 1111 01 00;    #
        0  010 010 010 000 0 1 0 1111 01 00;    #
        0  010 010 010 000 0 0 0 1111 01 00;    #
        0  010 010 010 000 1 0 1 1111 01 00;    #
        0  010 010 010 000 1 0 1 1111 01 00;    #
        0  010 010 010 000 1 0 1 1111 01 00;    #

        0  010 010 001 000 1 0 1 0000 01 00;    #
        0  010 010 001 000 1 0 1 0011 01 00;    #
        0  010 010 001 000 1 0 1 1000 01 00;    #
        0  010 010 001 000 0 0 1 0100 01 00;    #
        0  010 010 001 000 0 0 1 1100 01 00;    #
        0  010 010 001 000 0 0 1 0010 01 00;    #
        0  010 010 001 000 0 0 1 1010 01 00;    #
        0  010 010 100 000 0 0 1 0110 01 00;    #

        0  010 010 100 000 0 0 1 1111 01 00;    #
        0  010 010 100 000 0 0 0 1111 01 00;    #
        0  010 010 100 000 0 1 0 1111 01 00;    #
        0  010 010 100 000 0 1 0 1111 01 00;    #
        0  010 010 100 000 0 1 0 1111 01 00;    #
        0  010 010 100 000 0 1 0 1111 01 00;    #
        0  010 010 100 000 0 1 0 1111 01 00;    #
        0  010 010 100 000 0 1 0 1111 01 00;    #

end define;
```

Fiber Link

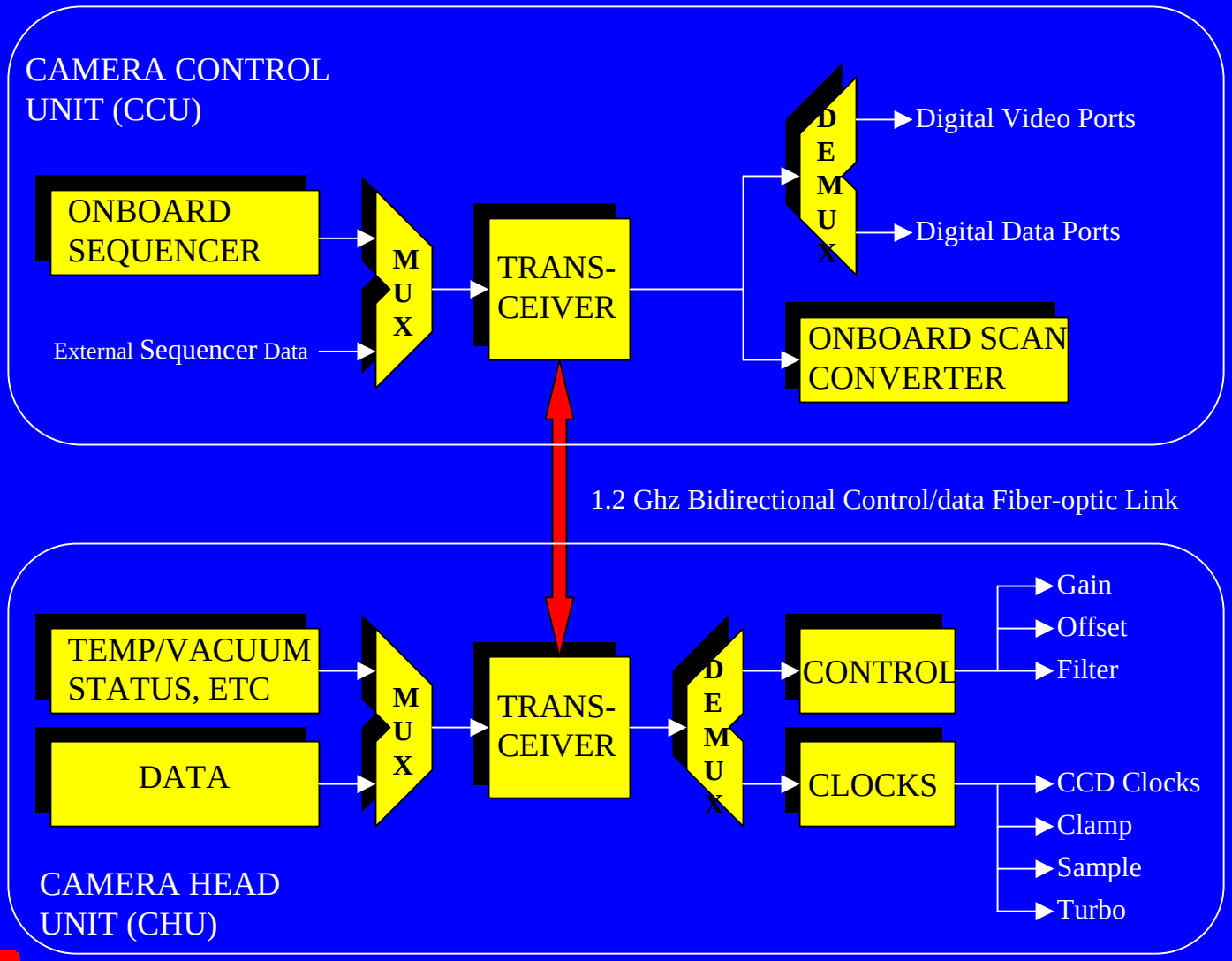
CAMERA CONTROL UNIT (CCU)
ONBOARD SEQUENCER
External Sequencer Data
MUX
TRANS-CEIVER
DEMUX
Digital Video Ports
Digital Data Ports
ONBOARD SCAN CONVERTER
1.2 Ghz Bidirectional Control/data Fiber-optic Link
TEMP/VACUUM STATUS, ETC
DATA
MUX
TRANS-CEIVER
DEMUX
CONTROL
Gain
Offset
Filter
CLOCKS
CCD Clocks
Clamp
Sample
Turbo
CAMERA HEAD UNIT (CHU)

Clock Driver Board

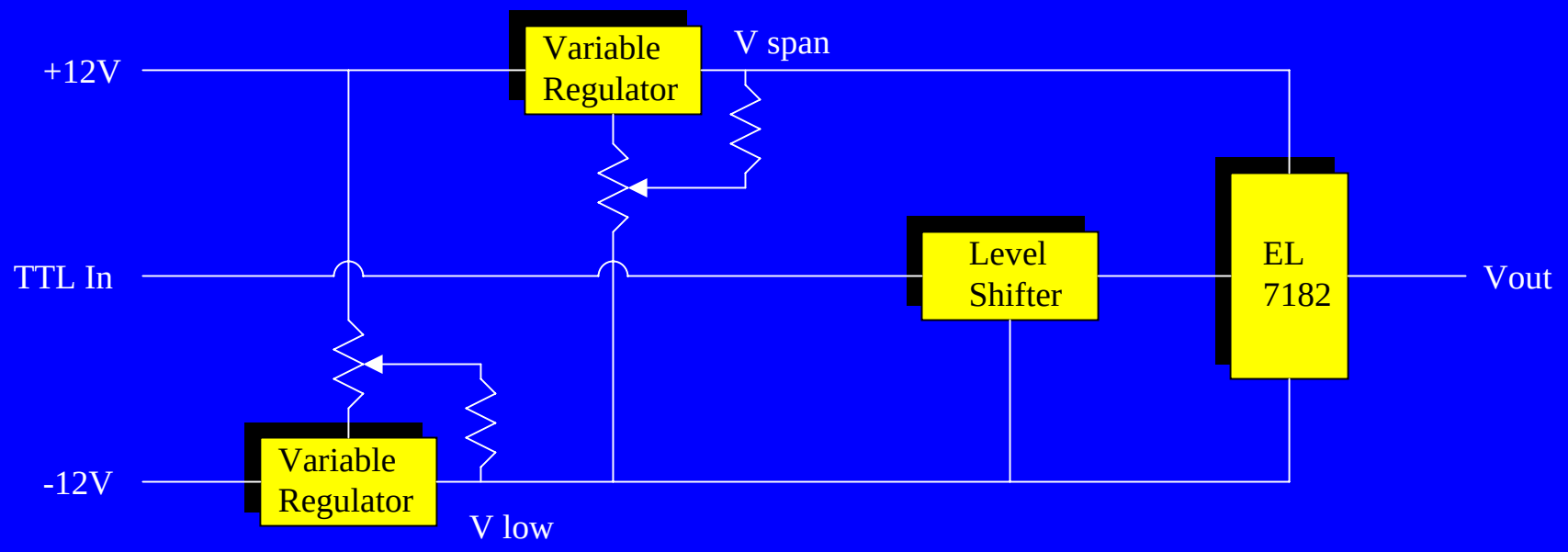

- 12 Individually Programmable Clocks
- ±11V Range
- 16V Maximum Swing
- 20 ns Switching Time

Preamplifier Board

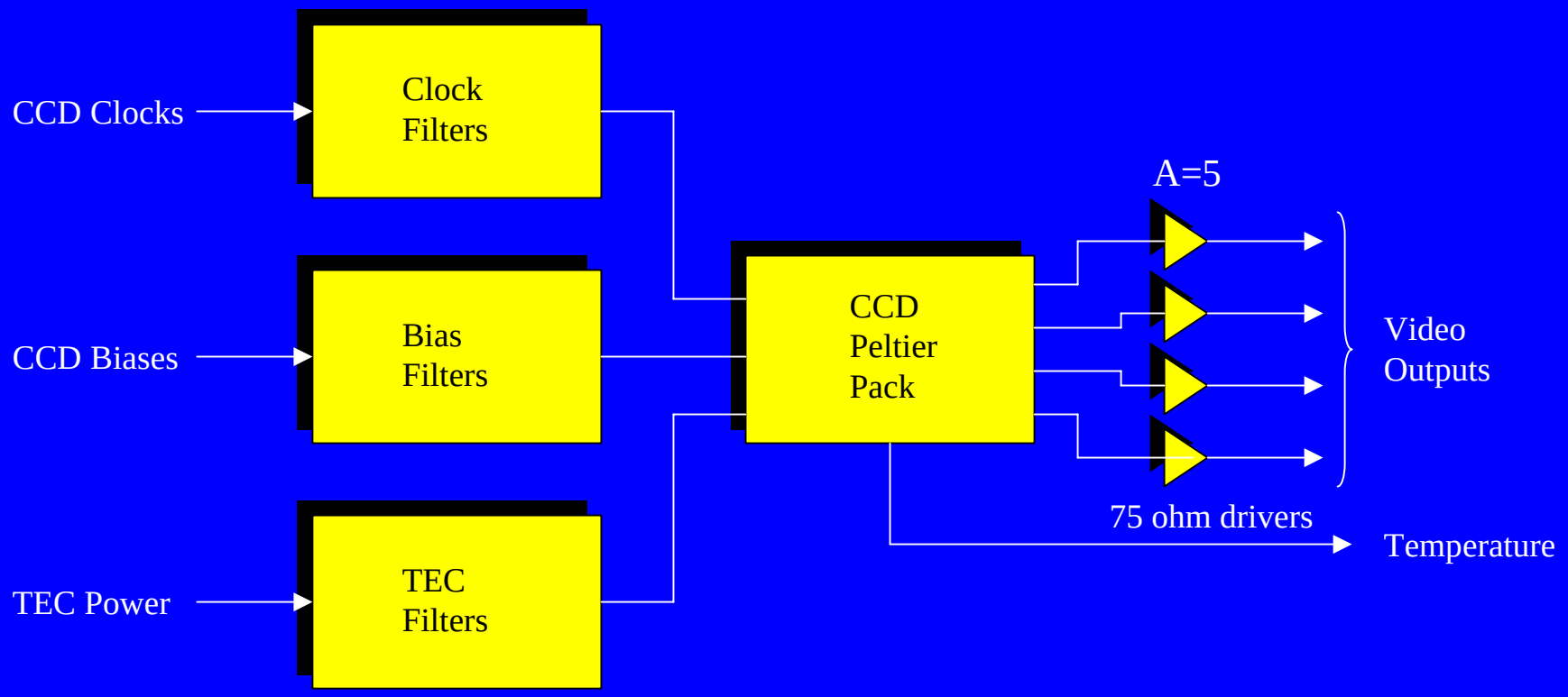

Analog Processor

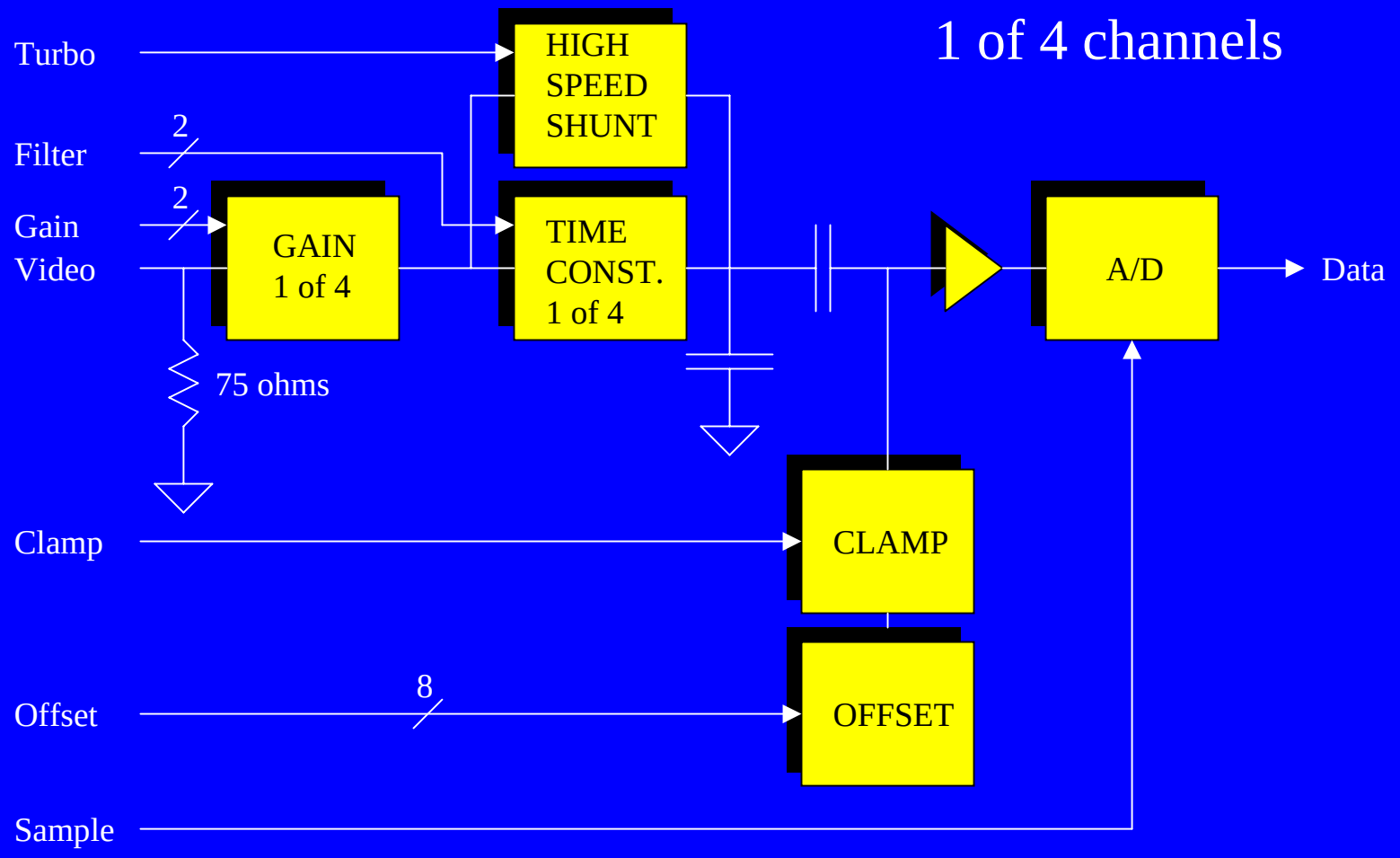

Data Output/Display/Capture

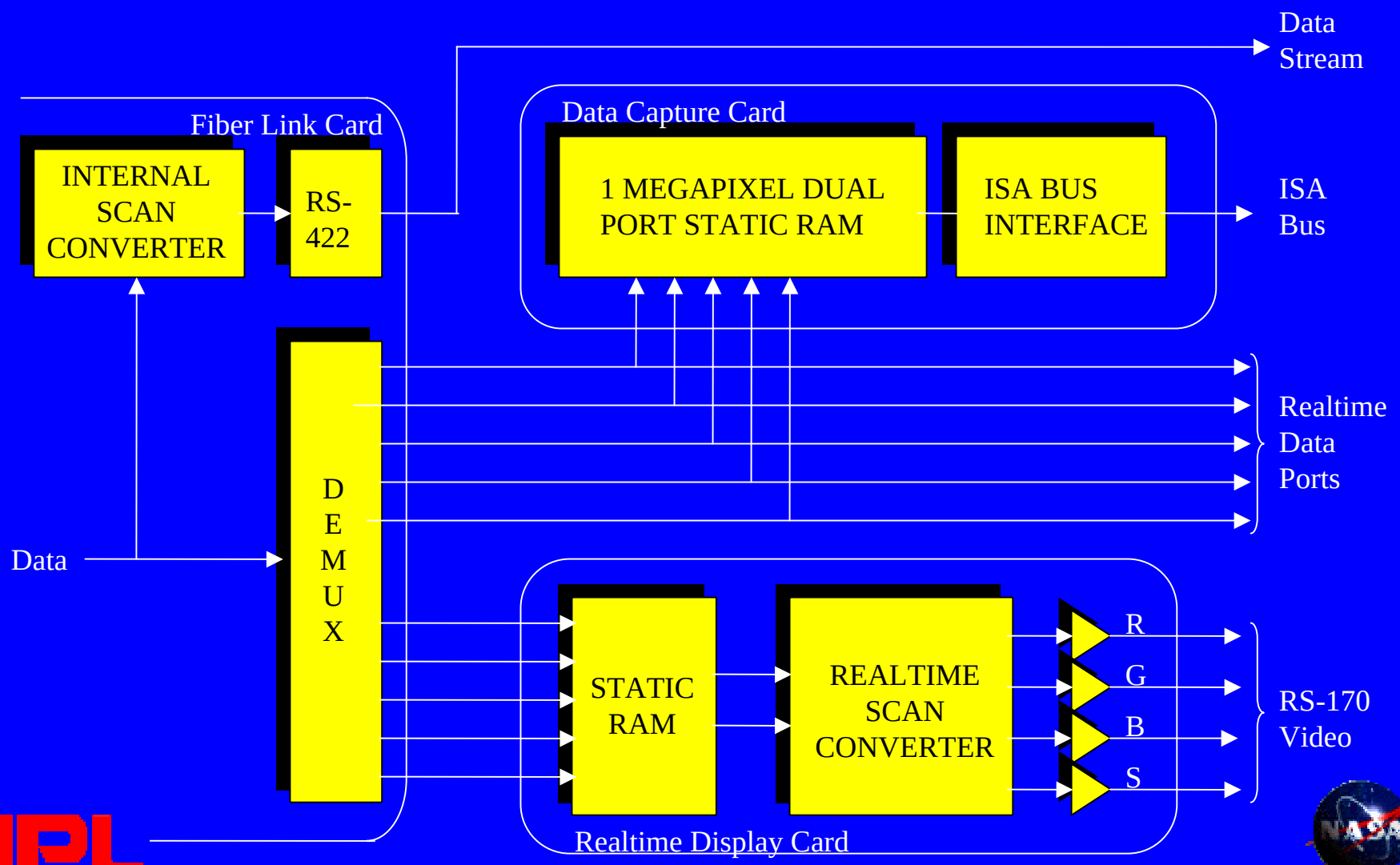

Control Panel

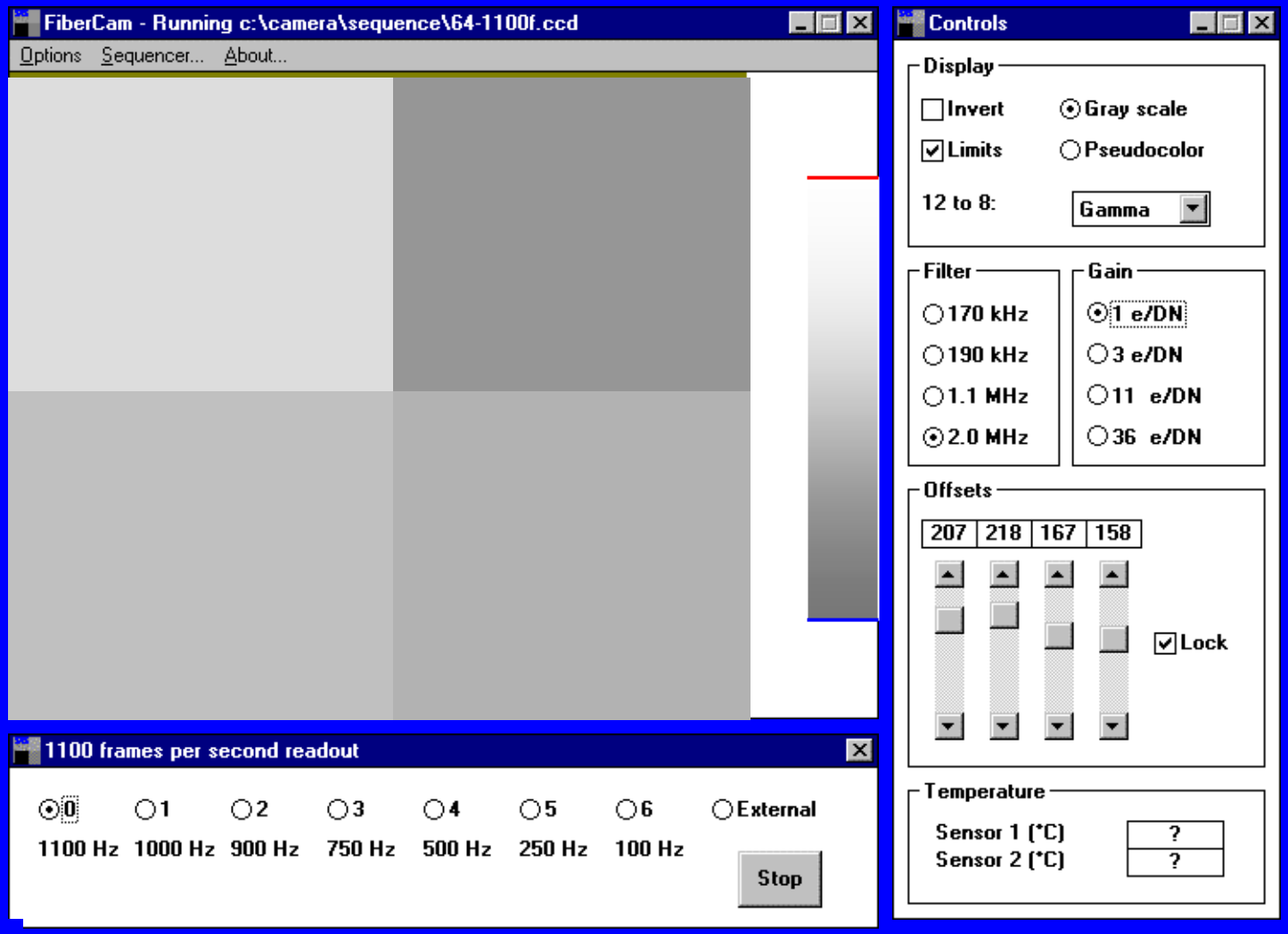

Camera Performance

Noise (e-)		Pixel Rate (/sec/port)	Frame Rate (/sec)
3.0	@	80 kpix	50
3.5	@	178 kpix	110
5.9	@	1.14 Mpix	550
7.5	@	2.00 Mpix	1100

EEV CCD39 - 64x64 pixel frame size - Read Noise calculated from Photon Transfer curve
MIT/LL CCID19 achieved 5.9 e- @ 1.1 Mpix/sec/port and 600 frames/sec

Palomar AO System

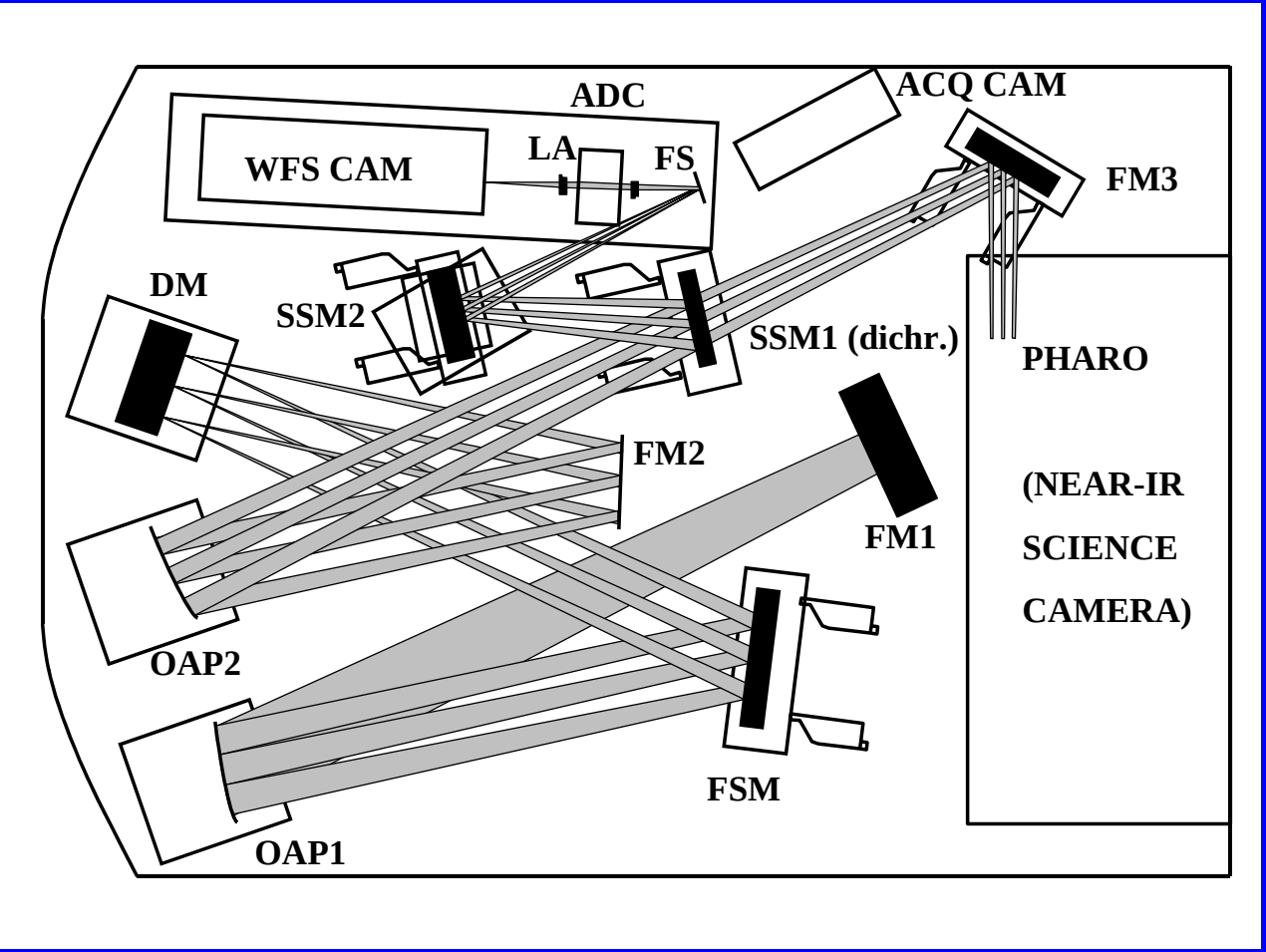

Palomar AO System

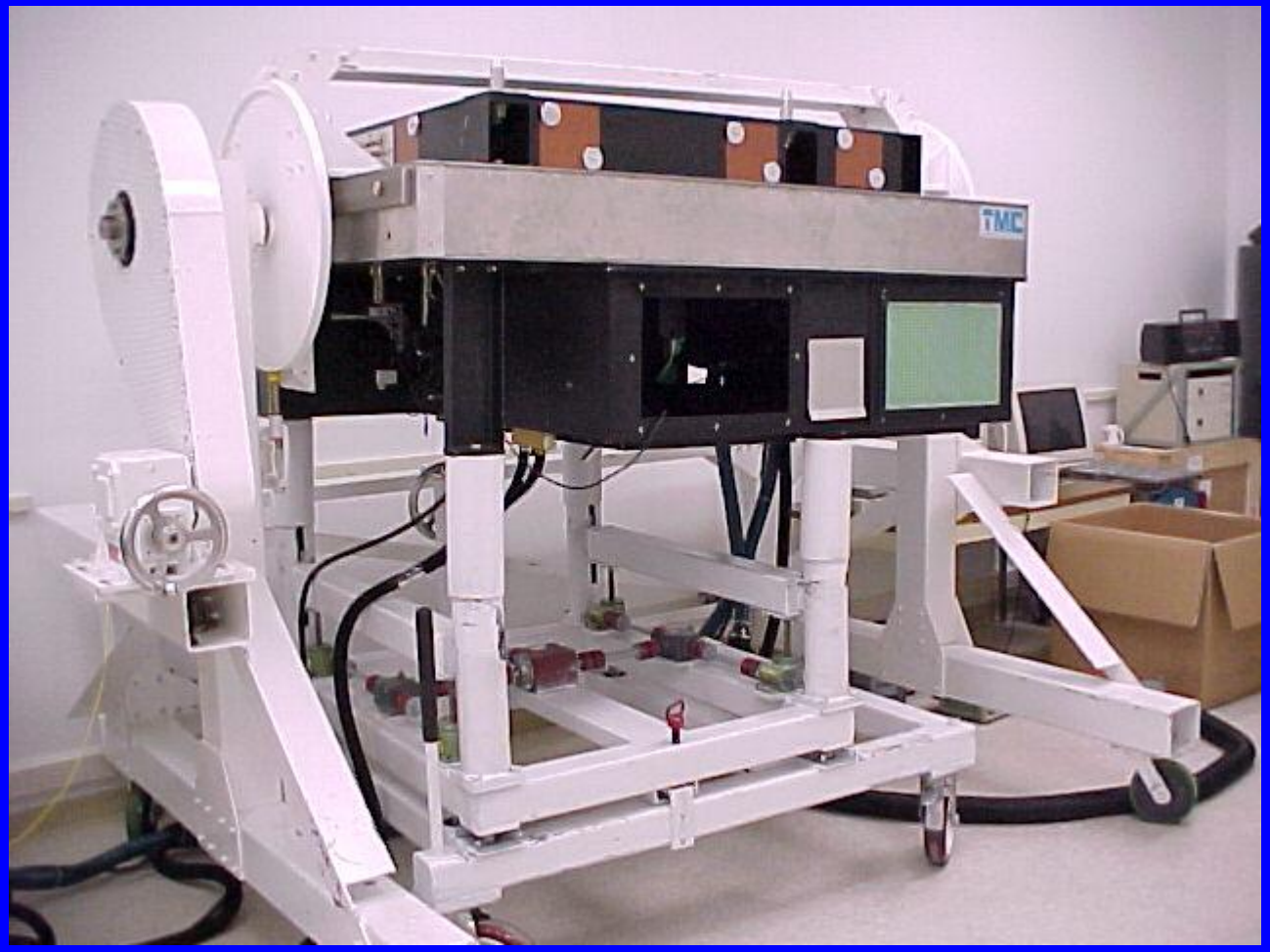

PALAO Results

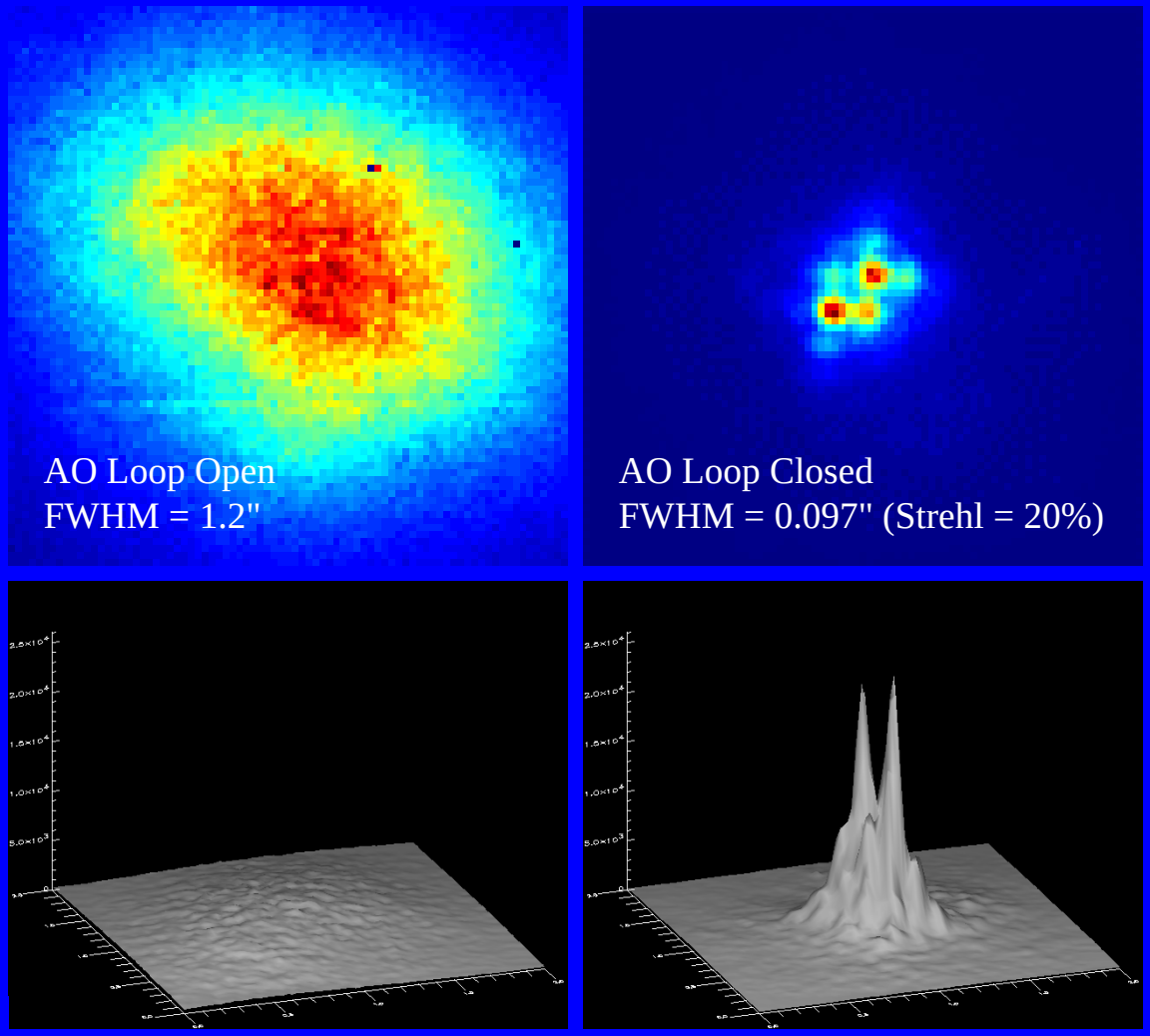

QS Aql
(HR 7486)
Binary Star
with
0.185"
Separation

MAM Vacuum Tank

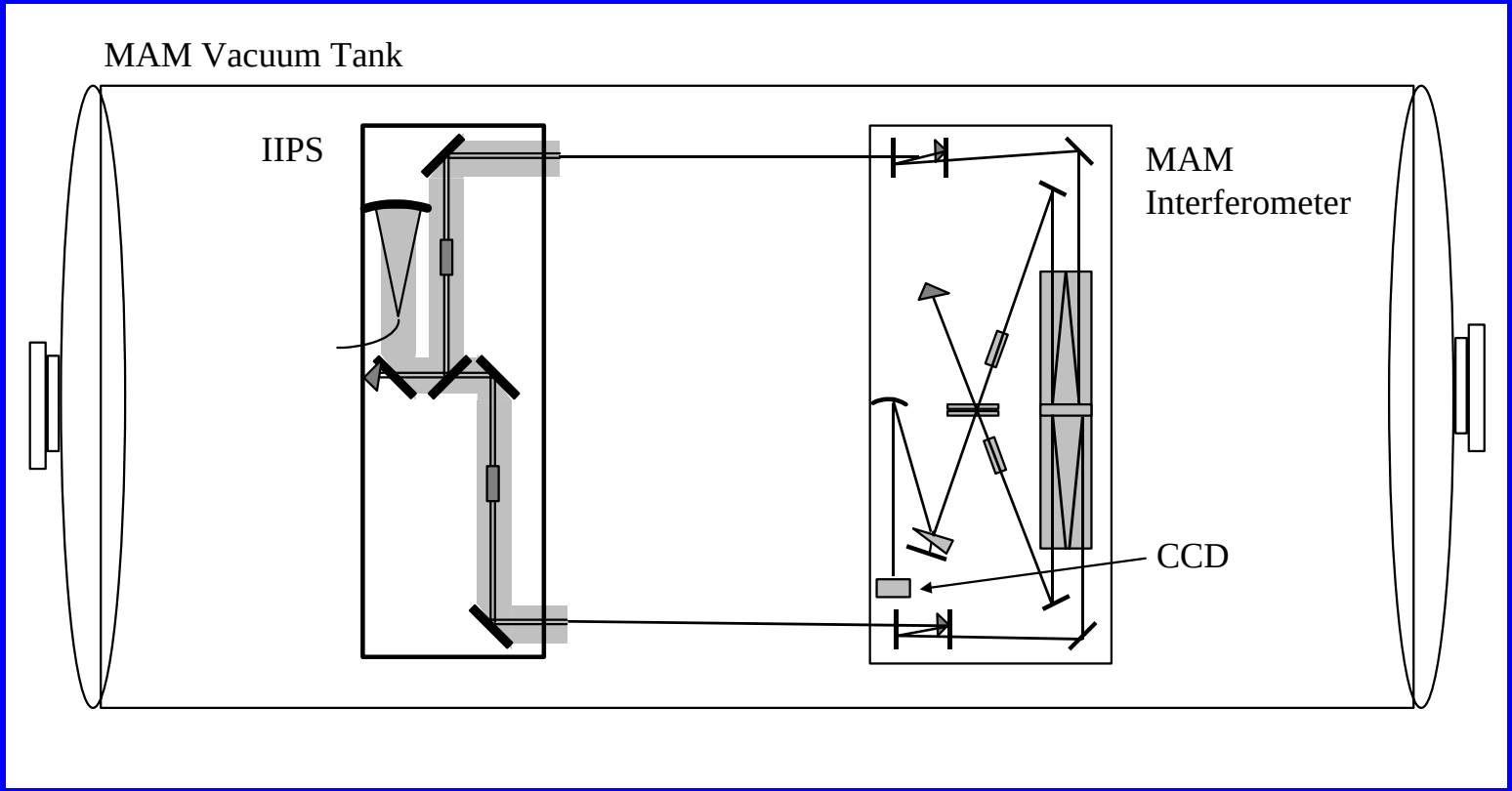

MAM Vacuum Tank

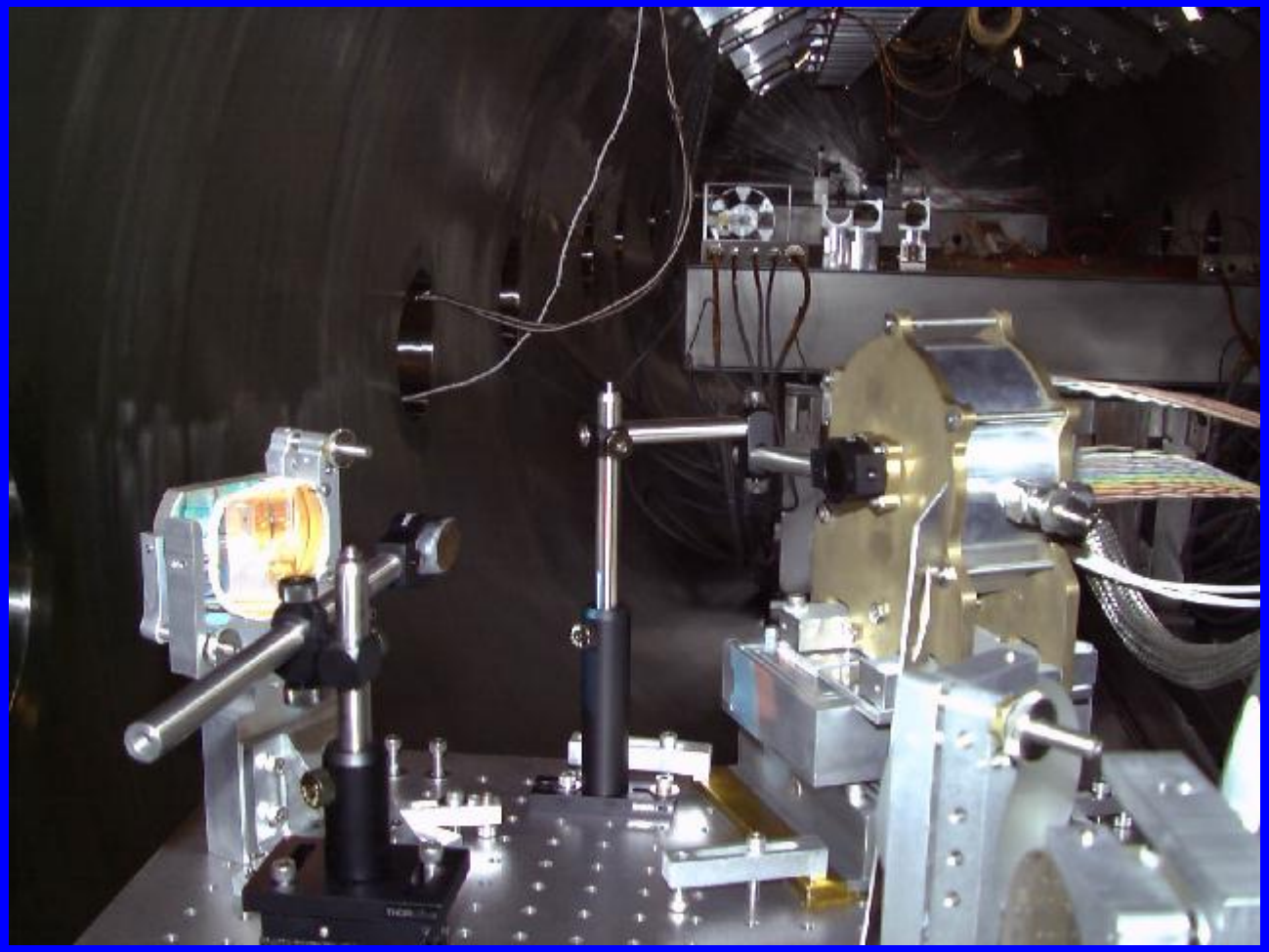

Control Panel

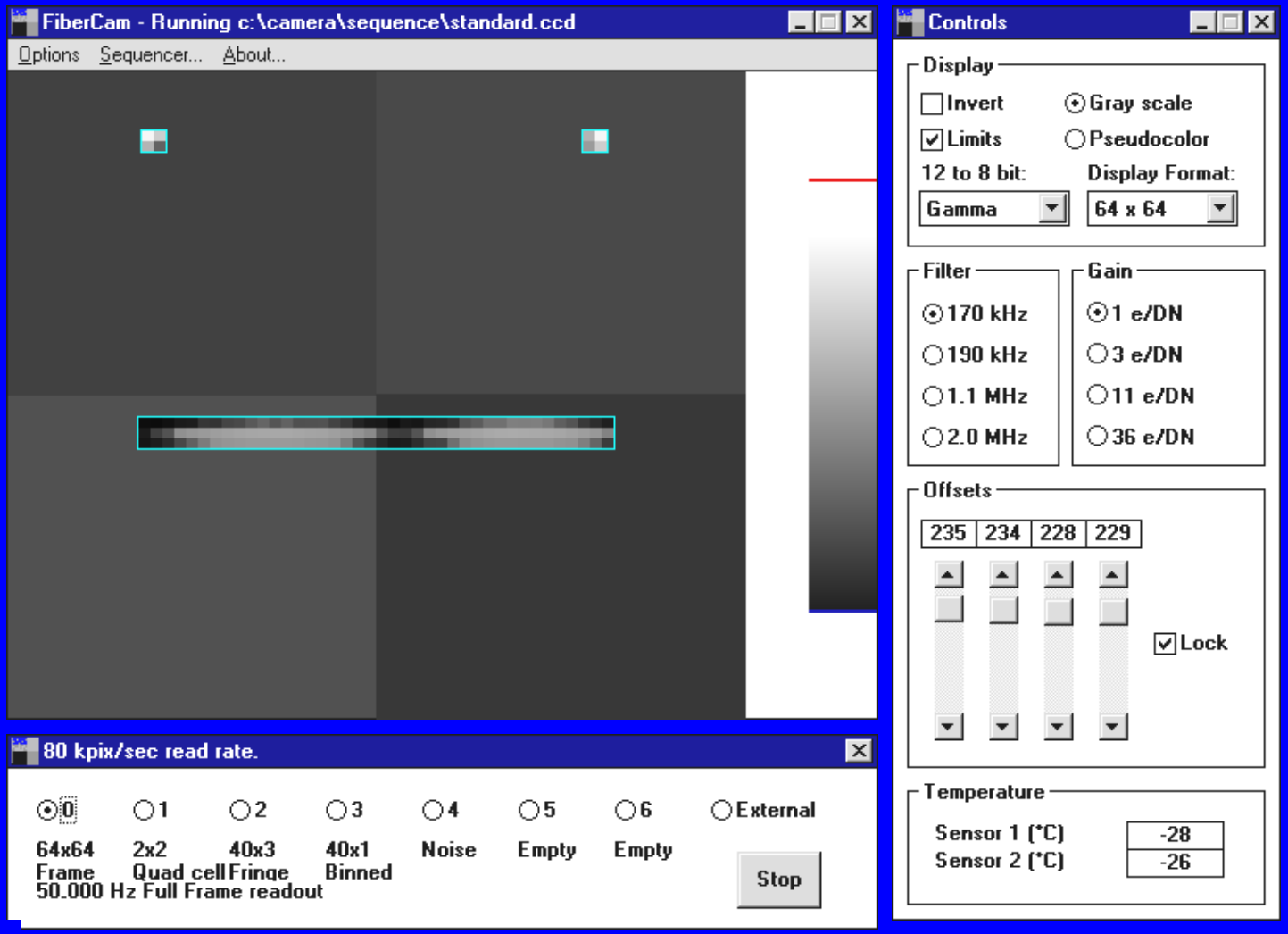

Future Camera Overview I

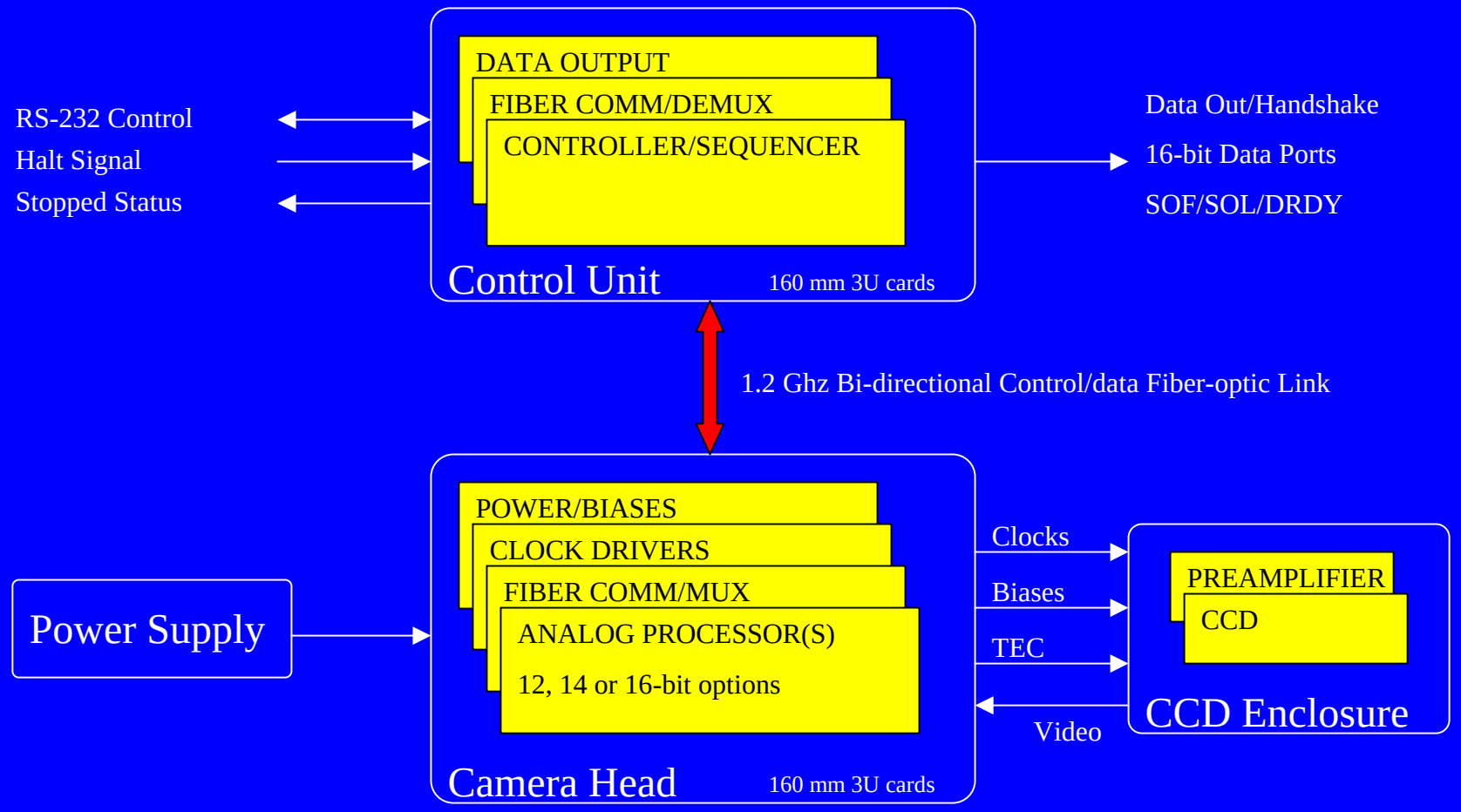

Future Camera Overview II

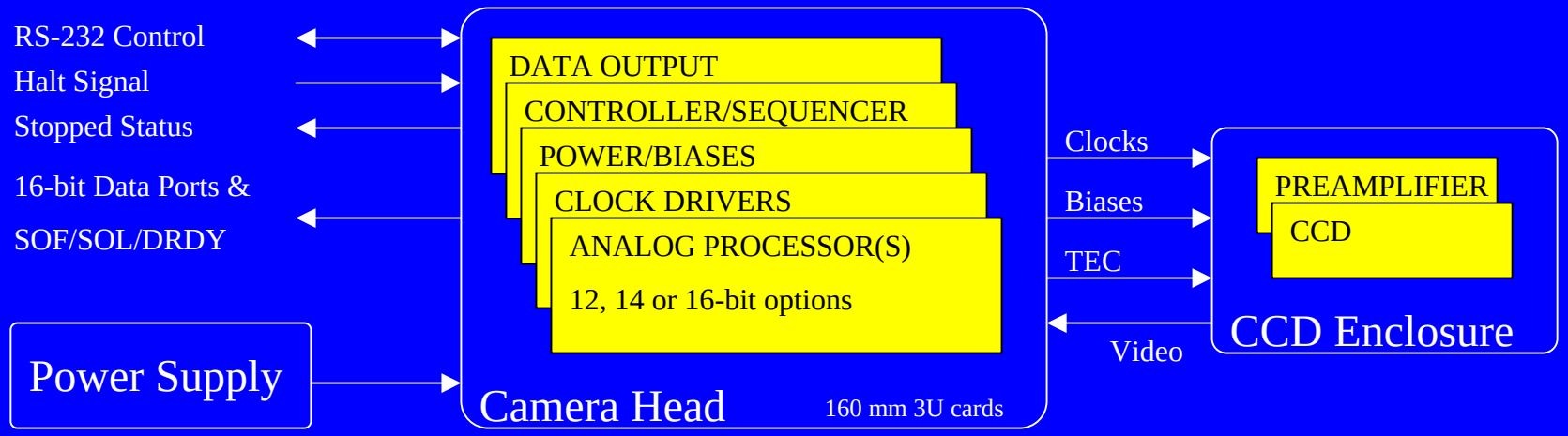

Acknowledgements

- SBIR Phase I Grant NAS8-97195
- SBIR Phase II Grant NAS8-98081
- Horace Dale - Physics Dept, Emory University
- Betty Motter - SciMeasure
- Part of the research described herein was carried out at the Jet Propulsion Laboratory, under a contract with the National Aeronautics and Space Administration